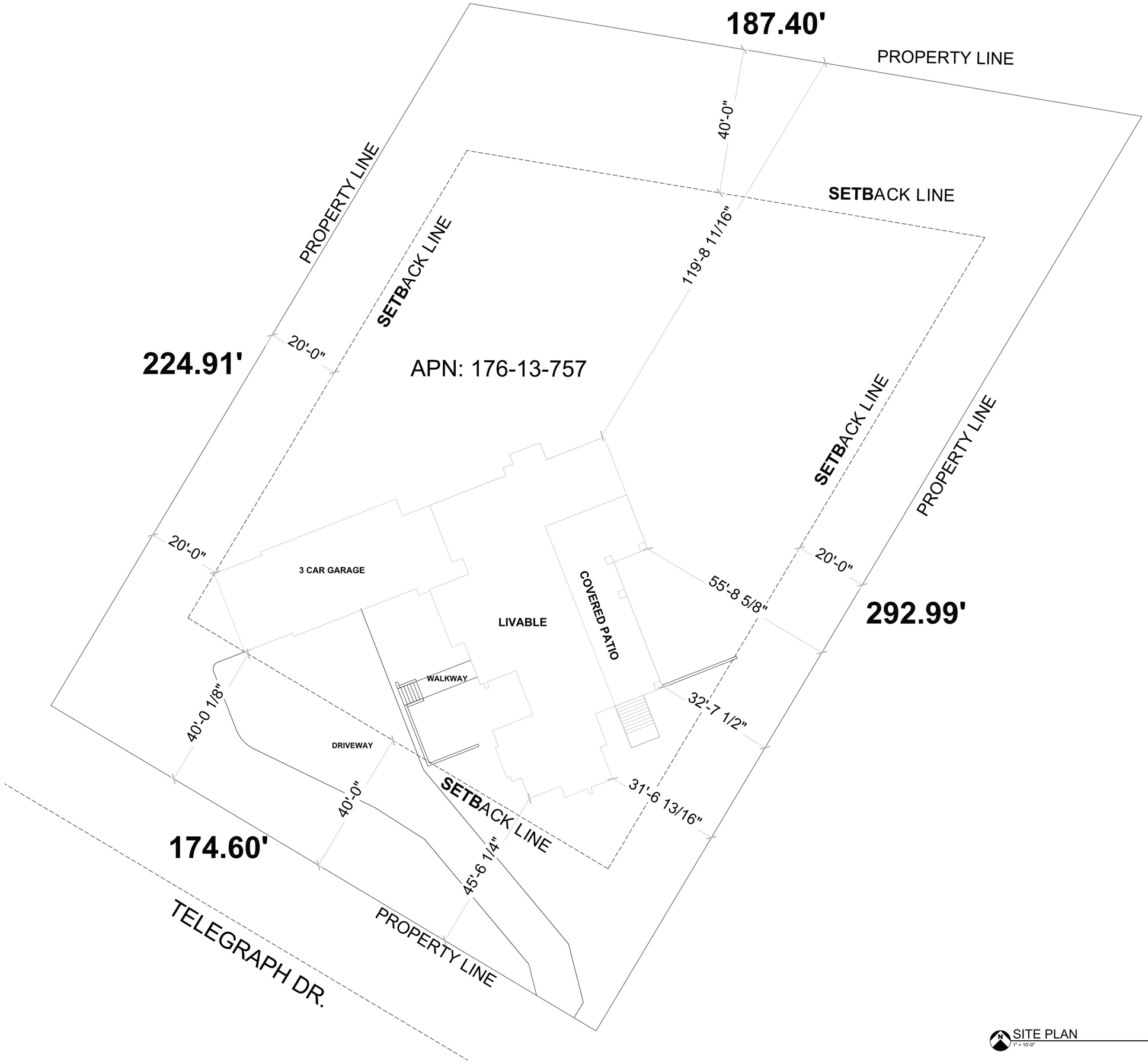

SITE PLAN
1" = 10'-0"

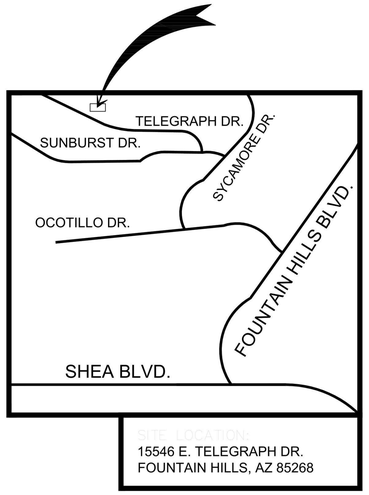

PROJECT LOCATION MAP
N.T.S.

briancottdesign
4127 E. Mesquite St.
Gilbert, AZ 85296
602-999-1690
bromney@briancottdesign.com

KASNOFF RESIDENCE

15546 E. TELEGRAPH DR.
FOUNTAIN HILLS, AZ.
85268

1

NOTE:
FIRE SPRINKLERS REQUIRED

PROPERTY INFORMATION

OWNER:
GEORGE AND CINDY KAUSNOFF

ADDRESS:
15546 E. TELEGRAPH DR.
FOUNTAIN HILLS, AZ 85268

APN: 176-13-757

ZONING: R1-35

TOTAL BUILDING FOOTPRINT: 5,523 SQ. FT.

LOT SIZE: 45,276 SQ. FT.

MAXIMUM LOT COVERAGE: 20%

PROPOSED LOT COVERAGE: 12.19%

SHEET INDEX

ARCHITECTURALS

C1.1	COVER SHEET AND SHEET INDEX
C1.2	GENERAL ARCH. NOTES
C1.3	GENERAL ARCH. NOTES
A1.1	FIRST FLOOR PLAN
A1.2	BASEMENT FLOOR PLAN
A1.3	EXTERIOR ELEVATIONS/SECTION
A1.4	EXTERIOR ELEVATIONS
A1.5	ROOF PLANS
E1.1	ELECTRICAL FIRST FLOOR PLAN
E1.2	ELECTRICAL BASEMENT PLAN
P1.1	PLUMBING AND WASTE SCHEMATIC
P1.2	GAS SCHEMATIC
AD1	ARCHITECTURAL DETAILS
AD2	ARCHITECTURAL DETAILS
AD3	ARCHITECTURAL DETAILS
AD4	ARCHITECTURAL DETAILS
G&D-1	GRADING AND DRAINAGE
G&D-2	GRADING AND DRAINAGE
G&D-3	GRADING AND DRAINAGE
GSN	GENERAL STRUCTURAL NOTES
S10	FOUNDATION PLAN
S20	FRAMING PLAN
S21	FRAMING PLAN
S30	BRACED WALL PLAN
S31	BRACED WALL PLAN
SD1	DETAILS
SD2	DETAILS
SD3	DETAILS

SQUARE FOOTAGE TABLE

LIVABLE FIRST FLOOR:	2,976 SQ. FT.
LIVABLE BASEMENT:	1,176 SQ. FT.
GARAGE:	1,519 SQ. FT.
PORCHES/PATIOS:	1,804 SQ. FT.
TOTAL FOOTPRINT:	5,523 SQ. FT.

CODE INFORMATION

MUNICIPALITY - TOWN OF FOUNTAIN HILLS
2018 IBC
2018 IRC
2018 IECC
2018 IMC
2018 IFGC
2017 NEC
2018 IPC
2018 IFC
2018 IPMC

TITLE:
COVER SHEET/SITE PLAN
KASNOFF RESIDENCE

DATE: 8/06/21

1
2
3

APPROVED
07/11/2022

SHEET NUMBER
C1.1

GENERAL ARCHITECTURAL

1. ALL PRODUCTS LISTED BY I.C.C/ESR NUMBER(S) SHALL BE INSTALLED PER THE REPORT AND MANUFACTURER'S WRITTEN INSTRUCTIONS. PRODUCT I.C.C. APPROVED SUBSTITUTION(S) FOR PRODUCT(S) LISTED SHALL ALSO HAVE EVALUATION REPORT(S) OR BE APPROVED AND LISTED BY OTHER NATIONALLY RECOGNIZED TESTING AGENCIES.

2. VERIFY ALL DIMENSIONS AND CONDITIONS PRIOR TO STARTING WORK. NOTIFY THE DESIGNER OF ANY DISCREPANCIES OR INCONSISTENCIES. VERIFY IN FIELD ALL EXISTING CONDITIONS SHOWN ON DRAWINGS. VERIFY ALL DIMENSIONS WITH ARCHITECTURAL DRAWINGS. PROVIDE ALL MEASURES NECESSARY TO PROTECT THE STRUCTURES DURING CONSTRUCTION. SUCH MEASURES SHALL INCLUDE, BUT NOT BE LIMITED TO, BRACING AND SHORING FOR LOADS IMPOSED DURING CONSTRUCTION, ETC. DETAILS ON THE STRUCTURAL DRAWINGS ARE TYPICAL NOTES AND DETAILS ON DRAWINGS SHALl TAKE PRECEDENCE OVER GENERAL NOTES AND TYPICAL DETAILS. WHERE NO SUCH DETAILS ARE SHOWN, CONSTRUCTION SHALL CONFORM TO SIMILAR WORK ON THE PROJECT.

3. ESTABLISH AND VERIFY ALL OPENINGS AND INSERTS FOR MECHANICAL, ELECTRICAL, AND PLUMBING WITH APPROPRIATE TRADES, DRAWINGS, AND SUB-CONTRACTORS PRIOR TO CONSTRUCTION.

4. CONNECT WATER, GAS, ELECTRIC LINES TO EXISTING UTILITIES IN ACCORDANCE WITH LOCAL COUNTY BUILDING CODES.

5. THE CONTRACTOR SHALL PROVIDE AND PAY FOR ALL TEMPORARY UTILITIES.

6. ALL WORK SHALL COMPLY WITH ALL APPLICABLE CODES AND ORDINANCES MUNICIPALITY, COUNTY AND STATE FOR THE GOVERNING

7. THE CONTRACTOR SHALL PAY FOR ALL FEE'S AND PERMITS NECESSARY FOR THE PROPER COMPLETION OF THE WORK.

8. THE CONTRACTOR SHALL VERIFY ALL FOOTINGS, TANKS AND SUBTERRANEAN VOIDS ARE REMOVED FROM THE SITE AND ALL HOLES ARE BACKFILLED AND COMPACTED TO FULLY SUPPORT THE DESIGN LOADS.

9. CONTRACTOR SHALL KEEP PREMISES FREE OF RUBBISH AND EXCESS MATERIAL.

10. FINISH FLOOR ELEVATION (AS-BUILT) SHALL BE CERTIFIED BY THE GOVERNING MUNICIPALITY FOR THE FEDERAL EMERGENCY MANAGEMENT ASSOCIATION (F.E.M.A.) WHERE REQUIRED.

11. THE CONTRACTOR, BY PROCEEDING WITH CONSTRUCTION REPRESENTS THAT: HE HAS REVIEWED THE CONSTRUCTION DRAWINGS, HAS HAD THE OPPORTUNITY TO VISIT THE SITE, HAS FAMILIARIZED HIMSELF WITH LOCAL CONDITIONS, LAWS, REGULATIONS AND SECURITY REQUIREMENTS UNDER WHICH WORK IS TO BE PERFORMED, AND THE SITE USES COORDINATED WITH BUILDER . ALSO, THE CONTRACTOR SHALL VERIFY ALL EXISTING CONDITIONS ON THE SITE PRIOR TO CONSTRUCTION. ALL DISCREPANCIES AND POTENTIAL CONFLICTS WITH THESE CONSTRUCTION DRAWINGS SHALL BE REPORTED TO TO THE DRAFTSMAN BEFORE PROCEEDING WITH CONSTRUCTION.

12. THE CONTRACTOR SHALL ESTABLISH THE GRADE AND BUILDING LOCATIONS AND VERIFY FINISH FLOOR ELEVATION PRIOR TO CONSTRUCTION.

13. CONTRACTOR SHALL TAKE NECESSARY PRECAUTIONS TO ENSURE THAT PARTIAL IN-PLACE CONSTRUCTION IS ADEQUATELY BRACED AGAINST MOVEMENT AND THAT ALL HAZARDOUS AREAS ARE PROTECTED TO PREVENT INJURY.

14. THE PREMISES OF THE BUILDING AND SITE SHALL BE KEPT REASONABLY CLEAN OF DEBRIS EMANATING FROM THE WORK AT ALL TIMES. SUBCONTRACTORS SHALL BE RESPONSIBLE FOR SWEEPING WORK AREA DAILY. ALL CONSTRUCTION DEBRIS SHALL BE COLLECTED AND DEPOSITED IN DESIGNATED AREAS.

15. CONTRACTOR SHALL PROVIDE ALL FLASHING, SEALANTS, WEATHER STRIPPING AND OTHER NECESSARY MATERIALS TO ENSURE THE FINISHED BUILDING WILL BE WEATHER TIGHT. CONTRACTOR SHALL CAULK AROUND ALL DOORS, WINDOWS, AND OTHER OPENINGS OR JOINTS WITH A SILICONE BASE SEALANT. LEAVE ADJACENT SURFACES CLEAN AND PROVIDE BACKING WHERE REQUIRED.

16. THE SITE OF CONSTRUCTION IS AS SHOWN ON THE DRAWING. THE SUBCONTRACTOR SHALL EXAMINE THE PREMISES BEFORE SUBMITTING A PROPOSAL AND SHALL FAMILIARIZE THEMSELVES WITH CONDITIONS UNDER WHICH THEY WILL HAVE TO WORK. EACH BIDDER SHALL BE RESPONSIBLE FOR ANY ERRORS IN THEIR PROPOSAL RESULTING FROM FAILURE TO MAKE A SITE INVESTIGATION AND DETERMINATION OF THESE CONDITIONS.

17. ALL FINISHES SHALL BE SELECTED BY BUILDER AND ALL FLOORS, WALLS, CEILINGS, WOODWORK, ETC. SHALL BE PREPARED APPROPRIATELY TO RECEIVE THEIR RESPECTIVE FINISHES.

18. ALL FINISH HARDWARE SHALL BE SELECTED BY BUILDER .

19. FURNISH ALL FINISH HARDWARE NECESSARY FOR SMOOTH OPERATION OF DOORS. INCLUDE ALL REQUIRED DOOR STOPS, THRESHOLDS, WEATHER STRIPPING, FLUSH BOLTS, ETC. CONSULT WITH OWNER AS TO THE FUNCTION OF EACH DOOR IN ORDER TO DETERMINE APPROPRIATE HARDWARE.

20. MISCELLANEOUS SITE STRUCTURES, SWIMMING POOLS, SPAS, FENCES, SITE WALLS (INCLUDING RETAINING WALLS), AND GAS STORAGE TANKS REQUIRE SEPARATE PERMITS.

21. THE CONTRACTOR SHALL PROVIDE AND MAINTAIN FIRE PROTECTION WITH SUFFICIENT CLEAR AREAS TO THE SATISFACTION OF THE GOVERNING MUNICIPALITY.

22. ALL ITEMS NOT SPECIFICALLY MENTIONED, BUT ARE NECESSARY TO MAKE A COMPLETE WORKING INSTALLATION, SHALL BE INCLUDED UNDER CONTRACT WITH BUILDER.

23. ALL MATERIALS USED IN THIS PROJECT SHALL BE NEW AND UNUSED UNLESS OTHERWISE SPECIFIED BY BUILDER.

24. ALL OPTIONS SHOWN ARE FOR THE USE AND CONVENIENCE FOR BUILDER . BUILDER SHALL BE RESPONSIBLE FOR ALL CHANGES NECESSARY IF AN OPTION IS CHOSEN AND SHALL COORDINATE ALL DETAILS.

25. THE ENGINEER SHALL NOT BE RESPONSIBLE FOR THE MEANS, METHODS, PROCEDURES, TECHNIQUES, OR SEQUENCES OF CONSTRUCTION, NOR FOR THE SAFETY ON THE JOB SITE, NOR SHALL THE ENGINEER BE RESPONSIBLE FOR THE CONTRACTOR'S FAILURE TO CARRY OUT THE WORK IN ACCORDANCE WITH THE CONSTRUCTION DOCUMENTS.

26. REFER TO ENGINEERING OFF-SITE PLANS FOR GRADING AND DRAINAGE PLANS.

27. FINISH GRADE SHALL SLOPE 2 % FOR A DISTANCE OF 10'-0" TO AN APPROVED. WATER DISPOSAL AREA.

28. IN ALL SLEEPING AREAS, PROVIDE AN OPERABLE WINDOW OR DOOR WITH AN AREA OF 5.7 SQ. FT. (MIN.) OPENING DIRECTLY TO THE OUTSIDE WITH A MINIMUM NET CLEAR OPENING OF 20" WIDE AND 24" HIGH.

29. PROVIDE CONTINUOUS EGRESS FROM BASEMENTS AND EVERY BEDROOM WINDOW TO A PUBLIC WAY PER SECTION R310.

30. MAXIMUM WINDOW SILL HEIGHTS SHALL BE 44" ABOVE FINISHED FLOOR PER SECTION R310.1.

31. SLOPE SILLS TO DRAIN AWAY FROM WINDOWS.

32. SLOPE EXPOSED TOP OF PARAPETS AND WALLS TO DRAIN WATER.

33. WATERPROOF ALL SILLS AND PARAPETS. AT C.M.U., USE WATERPROOF COATING PRIOR TO INSTALLING FINISH. AT WOOD FRAMING, COVER WITH ASTM TYPE 30 FELT PRIOR TO INSTALLING FINISH (DO NOT PENETRATE TOP SURFACE AND ATTACH AT SIDES).

34. SEAL ALL VOIDS AROUND PENETRATIONS THROUGH FLOOR SLABS.

35. FLAT ROOFED AREAS SHALL HAVE A MINIMUM SLOPE OF 1/4" P.L.F. (SLOPE SHALL BE INTEGRAL TO TRUSS DESIGN WHEN TRUSS FRAMING IS USED OR SLOPE WITH RIPPERS AT CONVENTIONAL FRAMING).

36. MINIMUM 22"x30" ATTIC ACCESS IS REQUIRED TO ALL ATTIC AREAS THAT EXCEED 30 SQ. FT. WITH 30" OR MORE VERTICAL CLEAR HEIGHT - SEE FLOOR PLAN FOR LOCATION(S). PROVIDE 30" MIN. CLEAR HEAD ROOM ABOVE THE ATTIC ACCESS PANEL PER SECTION R807.1.

37. OVERFLOW DRAINS AND SCUPPERS:
A. OVERFLOW DRAINS - WHERE REQUIRED SHALL BE THE SAME SIZE AS THE ROOF DRAIN AND INSTALLED WITH INLET FLOW LINE LOCATED 2" MINIMUM ABOVE THE LOW POINT OF THE ROOF.
B. OVERFLOW SCUPPERS HAVING 3 TIMES THE SIZE OF THE ROOF DRAINS MAY BE INSTALLED IN THE ADJACENT PARAPET WALLS WITH THE INLET FLOW LINE ABOVE THE LOW POINT OF THE ADJACENT ROOF. OVERFLOW SCUPPERS SHALL HAVE A MINIMUM OPENING HEIGHT OF 4".
C. OVERFLOW DRAINS SHALL NOT BE CONNECTED TO ROOF DRAIN LINES PER SECTION R903.4.1.

38. SKYLIGHTS: USE "BRISTOLITE" I.C.C. ER-2469 (OR ICC APPROVED EQUAL) CURB MOUNTED DOUBLE DOME SKYLIGHTS INSTALLED PER EVALUATION REPORT AND MANUFACTURER'S WRITTEN SPECIFICATIONS.

39. BOTTOM OF ALL FOOTINGS SHALL BE A MINIMUM OF 1'-6" BELOW UNDISTURBED SOIL OR ENGINEER CERTIFIED COMPACTED SOIL PER SOILS REPORT.

40. FINISH FLOOR SHALL BE A MINIMUM OF 6" ABOVE ADJACENT FINISHED GRADE.

41. NO P.V.C. PIPE SHALL BE EXPOSED IN AREAS SUCH AS POOL EQUIPMENT. ANY EXPOSED P.V.C. SHALL BE PAINTED WITH A "SUNBLOCK" MATERIAL.

ROOF VENTILATION - R806

1. R806.1 VENTILATION REQUIRED. ENCLOSED ATTICS AND ENCLOSED RAFTER SPACES FORMED WHERE CEILINGS ARE APPLIED DIRECTLY TO THE UNDERSIDE OF ROOF RAFTERS SHALL HAVE CROSS VENTILATION FOR EACH SEPARATE SPACE BY VENTILATING OPENINGS PROTECTED AGAINST THE ENTRANCE OF RAIN OR SNOW. VENTILATION OPENINGS SHALL HAVE A LEAST DIMENSION OF 1/16 INCH MINIMUM AND 1/4 INCH MAXIMUM. VENTILATION OPENINGS HAVING A LEAST DIMENSION LARGER THAN 1/4 INCH SHALL BE PROVIDED WITH CORROSION-RESISTANT WIRE CLOTH SCREENING, HARDWARE CLOTH, OR SIMILAR MATERIAL WITH OPENINGS HAVING A LEAST DIMENSION OF 1/16 INCH MINIMUM AND 1/4 INCH MAXIMUM.

2. R806.2 MINIMUM AREA. THE TOTAL NET FREE VENTILATING AREA SHALL NOT BE LESS THAN 1/150 OF THE AREA OF THE SPACE VENTILATED EXCEPT THAT REDUCTION OF THE TOTAL AREA TO 1/300 IS PERMITTED PROVIDED ONE OR MORE OF THE FOLLOWING CONDITIONS ARE MET: 1. IN CLIMATE ZONES 6, 7 AND 8, A CLASS I OR II VAPOR RETARDER IN INSTALLED ON THE WARM-IN-WINTER SIDE OF THE CEILING. 2. AT LEAST 40 PERCENT AND NOT MORE THAN 50 PERCENT OF THE REQUIRED VENTILATING AREA IS PROVIDED BY VENTILATORS LOCATED IN THE UPPER PORTION OF THE ATTIC OR RAFTER SPACE. UPPER VENTILATORS SHALL BE LOCATED NO MORE THAN 3 FEET BELOW THE RIDGE OR HIGHEST POINT OF THE SPACE, MEASURED VERTICALLY, WITH THE BALANCE OF THE REQUIRED VENTILATION PROVIDED BY EAVE OR CORNICE VENTS. WHERE THE LOCATION OF WALL OR ROOF FRAMING MEMBERS CONFLICTS WITH THE INSTALLATION OF UPPER VENTILATORS, INSTALLATION MORE THAN 3 FEET BELOW THE RIDGE OR HIGHEST POINT OF THE SPACE SHALL BE PERMITTED.

ATTIC ACCESS - R807

1. R807.1 ATTIC ACCESS. BUILDINGS WITH COMBUSTIBLE CEILING OR ROOF CONSTRUCTION SHALL HAVE AN ATTIC ACCESS OPENING TO ATTIC AREAS THAT EXCEED 30 SQUARE FEET AND HAVE A VERTICAL HEIGHT OF 30 INCHES OR GREATER. THE VERTICAL HEIGHT SHALL BE MEASURED FROM THE TOP OF THE CEILING FRAMING MEMBERS TO THE UNDERSIDE OF THE ROOF FRAMING MEMBERS.

THE ROUGH OPENINGS SHALL NOT BE LESS THAN 22 INCHES BY 30 INCHES AND SHALL BE LOCATED IN A HALLWAY OR OTHER READILY ACCESSIBLE LOCATION. WHEN LOCATED IN A WALL, THE OPENING SHALL BE A MINIMUM OF 22 INCHES WIDE BY 30 INCHES HIGH. WHEN THE ACCESS IS LOCATED IN A CEILING, MINIMUM UNOBSTRUCTED HEADROOM IN THE ATTIC SPACE SHALL BE 30 INCHES AT SOME POINT ABOVE THE ACCESS MEASURED VERTICALLY FROM THE BOTTOM OF CEILING FRAMING MEMBERS.

2. N1102.2.4. ACCESS DOORS FROM CONDITIONED SPACES TO UNCONDITIONED SPACES (E.G., ATTICS AND CRAWL SPACES) SHALL BE WEATHERSTRIPPED AND INSULATED TO A LEVEL EQUIVALENT TO THE INSULATION ON THE SURROUNDING SURFACES. ACCESS SHALL BE PROVIDED TO ALL EQUIPMENT THAT PREVENTS DAMAGING OR COMPRESSING THE INSULATION. A WOOD FRAMED OR EQUIVALENT BAFFLE OR RETAINER IS REQUIRED TO BE PROVIDED WHEN LOOSE FILL INSULATION IS INSTALLED, THE PURPOSE OF WHICH IS TO PREVENT THE LOOSE FILL INSULATION FROM SPILLING INTO THE LIVING SPACE WHEN THE ATTIC ACCESS IS OPENED, AND TO PROVIDE A PERMANENT MEANS OF MAINTAINING THE INSTALLED R-VALUE OF THE LOOSE FILL INSULATION.

BATHTUBS - P2713

1. P2713.3 BATHTUB AND WHIRLPOOL BATHTUB VALVES. THE HOT WATER SUPPLIED TO BATHTUBS AND WHIRLPOOL BATHTUBS SHALL BE LIMITED TO A MAXIMUM TEMPERATURE OF 120° F BY A WATER-TEMPERATURE -LIMITING , EXCEPT WHERE ASSE 1070 OR CSA B125.3 DEVICE THAT CONFORMS TO SUCH PROTECTION IS OTHERWISE PROVIDED BY A COMBINATION TUB/SHOWER VALVE IN ACCORDANCE WITH SECTION P2708.3.

DRYER EXHAUST - M1502

1. M1502.2 INDEPENDENT EXHAUST SYSTEMS. DRYER EXHAUST SYSTEMS SHALL BE INDEPENDENT OF ALL OTHER SYSTEMS AND SHALL CONVEY THE MOISTURE TO THE OUTDOORS.

2. M1502.3 DUCT TERMINATION. EXHAUST DUCTS SHALL TERMINATE ON THE OUTSIDE OF THE BUILDING. EXHAUST DUCT TERMINATIONS SHALL BE IN ACCORDANCE WITH THE DRYER MANUFACTURES INSTALLATION INSTRUCTIONS. IF THE MANUFACTURERS INSTRUCTIONS DO NOT SPECIFY A TERMINATION LOCATION, THE EXHAUST DUCT SHALL TERMINATE NOT LESS THAN 3 FEET IN ANY DIRECTION FROM OPENINGS INTO BUILDINGS. EXHAUST DUCT TERMINATIONS SHALL BE EQUIPPED WITH A BACKDRAFT DAMPER. SCREENS SHALL NOT BE INSTALLED AT THE DUCT TERMINATION.

3. M1502.4.1 MATERIAL AND SIZE. EXHAUST DUCTS SHALL HAVE A SMOOTH INTERIOR FINISH AND SHALL BE CONSTRUCTED OF METAL HAVING A MINIMUM THICKNESS OF 0.0157 INCHES (No. 28 GAGE). THE EXHAUST DUCT SIZE SHALL BE 4 INCHES NOMINAL IN DIAMETER.

4. M1502.4.2 DUCT INSTALLATION. EXHAUST DUCTS SHALL BE SUPPORTED AT INTERVALS NOT TO EXCEED 12 FEET AND SHALL BE SECURED IN PLACE. THE INSERT END OF THE DUCT SHALL EXTEND INTO THE ADJOINING DUCT OR FITTING IN THE DIRECTION OF AIRFLOW. EXHAUST DUCTS SHALL BE SEALED IN ACCORDANCE WITH SECTION M1601.4.1 AND MECHANICALLY FASTENED. DUCTS SHALL NOT BE JOINED WITH SCREWS OR SIMILAR FASTENERS THAT PROTRUDE MORE THAN 1/8 INCH INTO THE INSIDE OF THE DUCT.

5. M1502.4.3 TRANSITION DUCT. TRANSITION DUCTS USED TO CONNECT THE DRYER TO THE EXHAUST DUCT SYSTEM SHALL BE A SINGLE LENGTH THAT IS LISTED AND LABELED IN ACCORDANCE WITH UL 2158A. TRANSITION DUCTS SHALL BE A MAXIMUM OF 8 FEET IN LENGTH. TRANSITION DUCTS SHALL NOT BE CONCEALED WITHIN CONSTRUCTION.

6. M1502.4.4 DUCT LENGTH. THE MAXIMUM ALLOWABLE EXHAUST DUCT LENGTH SHALL BE DETERMINED BY ONE OF THE METHODS SPECIFIED IN SECTION M1502.4.4.1 OR M1502.4.4.2.

7. M1502.4.4.2 MANUFACTURER'S INSTRUCTIONS. THE SIZE AND MAXIMUM LENGTH OF THE EXHAUST DUCT SHALL BE DETERMINED BY THE DRYER MANUFACTURE'S INSTALLATION INSTRUCTIONS. THE CODE OFFICIAL SHALL BE PROVIDED WITH A COPY OF THE INSTALLATION INSTRUCTIONS FOR THE MAKE AND MODEL OF THE DRYER AT THE CONCEALMENT INSPECTION. IN THE ABSENCE OF FITTING EQUIVALENT LENGTH CALCULATIONS FROM THE CLOTHES DRYER MANUFACTURER, TABLE M1502.4.4.1 SHALL BE USED.

CEILING HEIGHT - R305

1. R305.1 MINIMUM HEIGHT. HABITABLE SPACE, HALLWAYS, CORRIDORS, BATHROOMS, TOILET ROOMS, LAUNDRY ROOMS AND PORTIONS OF BASEMENTS CONTAINING THESE SPACES SHALL HAVE A CEILING HEIGHT OF NOT LESS THAN 7 FEET.

EXCEPTIONS:
1. FOR ROOMS WITH SLOPED CEILINGS, AT LEAST 50 PERCENT OF THE REQUIRED FLOOR AREA OF THE ROOM MUST HAVE A CEILING HEIGHT OF AT LEAST 7 FEET AND NO PORTION OF THE REQUIRED FLOOR AREA MAY HAVE A CEILING HEIGHT OF LESS THAN 5 FEET.
2. BATHROOMS SHALL HAVE A MINIMUM CEILING HEIGHT OF 6 FEET, 8 INCHES AT THE CENTER OF THE FRONT CLEARANCE AREA FOR FIXTURES AS SHOWN IN FIGURE R307.1. A SHOWER OR TUB EQUIPPED WITH A SHOWERHEAD SHALL HAVE A MINIMUM CEILING HEIGHT OF 6 FEET 8 INCHES ABOVE A MINIMUM AREA 30 INCHES BY 30 INCHES AT THE SHOWERHEAD.

2. R305.1.1 BASEMENTS. PORTIONS OF BASEMENTS THAT DO NOT CONTAIN HABITABLE SPACE, HALLWAYS, BATHROOMS, TOILET ROOMS AND LAUNDRY ROOMS SHALL HAVE A CEILING HEIGHT OF NOT LESS THAN 6 FEET 8 INCHES. EXCEPTION: BEAMS, GIRDERS, DUCTS OR OTHER OBSTRUCTIONS MAY PROJECT TO WITHIN 6 FEET 4 INCHES OF THE FINISHED FLOOR.

EMERGENCY ESCAPE AND RESCUE OPENINGS - R310

1. R310.1 EMERGENCY ESCAPE AND RESCUE REQUIRED. BASEMENTS, HABITABLE ATTICS AND EVERY SLEEPING ROOM SHALL HAVE AT LEAST ONE OPERABLE EMERGENCY ESCAPE AND RESCUE OPENING. WHERE BASEMENTS CONTAIN ONE OR MORE SLEEPING ROOMS, EMERGENCY EGRESS AND RESCUE OPENINGS SHALL BE REQUIRED IN EACH SLEEPING ROOM. WHERE EMERGENCY ESCAPE AND RESCUE OPENINGS ARE PROVIDED THEY SHALL HAVE A SILL HEIGHT OF NOT MORE THAN 44 INCHES MEASURED FROM THE FINSIHED FLOOR TO THE BOTTOM OF THE CLEAR OPENING. WHERE A DOOR OPENING HAVING A THRESHOLD BELOW THE ADJACENT GROUND ELEVATION SERVES AS AN EMERGENCY ESCAPE AND RESCUE OPENING AND IS PROVIDED WITH A BULKHEAD ESCAPE AND RESCUE OPENING AND IS PROVIDED WITH A BULKHEAD ENCLOSURE, THE BULKHEAD ENCLOSURE SHALL COMPLY WITH SECTION R310.3. THE NET CLEAR OPENING DIMENSIONS REQUIRED BY THIS SECTION SHALL BE OBTAINED BY THE NORMAL OPERATION OF THE EMERGENCY ESCAPE AND RESCUE OPENING FROM THE INSIDE. EMERGENCY ESCAPE AND RESCUE OPENINGS WITH A FINISHED SILL HEIGHT BELOW THE ADJACENT GROUND ELEVATION SHALL BE PROVIDED WITH A WINDOW WELL IN ACCORDANCE WITH SECTION R310.2. EMERGENCY ESCAPE AND RESCUE OPENINGS SHALL OPEN DIRECTLY INTO A PUBLIC WAY, OR TO A YARD OR COURT THAT OPENS TO A PUBLIC WAY.

2. R310.1.1 - R310.1.3.ALL EMERGENCY ESCAPE AND RESCUE OPENINGS SHALL HAVE A MINIMUM NET CLEAR OPENING OF 5.7 SQUARE FEET, EXCEPT GRADE FLOOR OPENINGS SHALL HAVE A MINIMUM NET CLEAR OPENING OF 5 SQUARE FEET. THE MINIMUM NET CLEAR OPENING HEIGHT SHALL BE 24 INCHES. THE MINIMUM NET CLEAR OPENING WIDTH SHALL BE 20 INCHES.

EXTERIOR COVERING - R703

1. GYPSUM BOARD INSTALLED, ON EXTERIOR OF BUILDING, WHERE IT IS DIRECTLY EXPOSED TO THE WEATHER SHALL COMPLY WITH ASTM C 931/C 931M-04 IN COMPLIANCE WITH R702.3.1 & 5.

2. STUCCO SYSTEM - USE I.C.C. APPROVED FIBER REINFORCED STUCCO SYSTEM WITH 1" POLYSTYRENE INSULATION BOARD, A.I.S. AT ATTIC AREAS. USE 1/2" FOAM OVER 1/2" A.I.S. BOARD OR R-TECH BOARD (I.C.C. ESR-1788) OR APPROVED EQUAL WITH APPROVED WEATHER RESISTIVE BARRIER PER I.R.C. SECTION R703.2.

3. M.A.G. ONE-COAT STUCCO COMPLIANCE PROGRAM: ALL ONE-COAT STUCCO SYSTEMS SHALL BE APPLIED BY MANUFACTURER-APPROVED INSTALLERS. AN APPROVED WEATHER-RESISTIVE BARRIER SHALL BE INSTALLED OVER ALL FRAMING AND WOOD-BASED SHEATHING.

4. R703.1 GENERAL. EXTERIOR WALLS SHALL PROVIDE THE BUILDING WITH A WEATHER- RESISTANT EXTERIOR WALL ENVELOPE. THE EXTERIOR WALL ENVELOPE SHALL INCLUDE FLASHING AS DESCRIBED IN SECTION R703.8.

R703.1.1 WATER RESISTANCE. THE EXTERIOR WALL ENVELOPE SHALL BE DESIGNED AND CONSTRUCTED IN SUCH A MANNER THAT PREVENTS THE ACCUMULATION OF WATER WITHIN THE WALL ASSEMBLY BY PROVIDING A WATER-RESISTIVE BARRIER BEHIND THE EXTERIOR VENEER AS REQUIRED BY SECTION R703.2 AND A MEANS OF DRAINING TO THE EXTERIOR WATER THAT ENTERS THE ASSEMBLY. PROTECTION AGAINST CONDENSATION IN THE EXTERIOR WALL ASSEMBLY SHALL BE PROVIDED IN ACCORDANCE WITH SECTION R702.7.

5. R703.2 WATER-RESISTIVE BARRIER. ONE LAYER OF NO. 15 ASPHALT FELT, FREE FROM HOLES AND BREAKS, COMPLYING WITH ASTM D 226 FOR TYPE 1 FELT OR OTHER APPROVED WATER-RESISTIVE BARRIER SHALL BE APPLIED OVER STUDS OR SHEATHING OF ALL EXTERIOR WALLS. SUCH FELT OR MATERIAL SHALL BE APPLIED HORIZONTALLY, WITH THE UPPER LAYER LAPPED OVER THE LOWER LAYER NOT LESS THAN 2 INCHES. WHERE JOINTS OCCUR, FELT SHALL BE LAPPED NOT LESS THAN 6 INCHES. THE FELT OR OTHER APPROVED MATERIAL SHALL BE CONTINUOUS TO THE TOP OF WALLS AND TERMINATED AT PENETRATIONS AND BUILDING APPENDAGES IN A MANNER TO MEET THE REQUIREMENTS OF THE EXTERIOR WALLS AS DESCRIBED IN SECTION R703.1.

EXCEPTION: OMISSION OF THE WATER-RESISTIVE BARRIER IS PERMITTED IN THE FOLLOWING SITUATIONS:
1. IN DETACHED ACCESSORY BUILDINGS.
2. UNDER EXTERIOR WALL FINISH MATERIALS AS PERMITTED IN TABLE R703.4. 3. UNDER PAPERBACKED STUCCO LATH WHEN THE PAPER BACKING IS AN APPROVED WATER-RESISTIVE BARRIER.

6. R703.6.1 LATH. ALL LATH AND LATH ATTACHMENTS SHALL BE OF CORROSION-RESISTANT MATERIALS. EXPANDED METAL OR WOVEN WIRE LATH SHALL BE ATTACHED WITH 1 1/2INCH LONG, 11 GAGE NAILS HAVING A 7/16- INCH HEAD, OR 7/8 INCH LONG, 16 GAGE STAPLES, SPACED AT NO MORE THAN 6 INCHES, OR AS OTHERWISE APPROVED.

7. R703.6.2 PLASTER. PLASTERING WITH PORTLAND CEMENT PLASTER SHALL BE NOT LESS THAN THREE COATS WHEN APPLIED OVER METAL LATH OR WIRE LATH AND SHALL BE NOT LESS THAN TWO COATS WHEN APPLIED OVER MASONRY, CONCRETE, PRESSURE-PRESERVATIVE TREATED WOOD OR DECAY-RESISTANT WOOD AS SPECIFIED IN SECTION R317.1 OR GYPSUM BACKING. IF THE PLASTER SURFACE IS COMPLETELY COVERED BY VENEER OR OTHER FACING MATERIAL OR IS COMPLETELY CONCEALED, PLASTER APPLICATION NEED BE ONLY TWO COATS, PROVIDED THE TOTAL THICKNESS IS AS SET FORTH IN TABLE R702.1(1). ON WOOD-FRAME CONSTRUCTION WITH AN ON-GRADE FLOOR SLAB SYSTEM, EXTERIOR PLASTER SHALL BE APPLIED TO COVER, BUT NOT EXTEND BELOW, LATH, PAPER AND SCREED.

8. R703.6.2.1 WEEP SCREEDS. A MINIMUM 0.019-INCH (NO. 26 GALVANIZED SHEET GAGE), CORROSION- RESISTANT WEEP SCREED OR PLASTIC WEEP SCREED, WITH A MINIMUM VERTICAL ATTACHMENT FLANGE 0F 3 1/2 INCHES SHALL BE PROVIDED AT OR BELOW THE FOUNDATION PLATE LINE ON EXTERIOR STUD WALLS IN ACCORDANCE WITH ASTM C 926. THE WEEP SCREED SHALL BE PLACED A MINIMUM OF 4 INCHES ABOVE THE EARTH OR 2 INCHES ABOVE PAVED AREAS AND SHALL BE OF A TYPE THAT WILL ALLOW TRAPPED WATER TO DRAIN TO THE EXTERIOR OF THE BUILDING. THE WEATHER-RESISTANT BARRIER SHALL LAP THE ATTACHMENT FLANGE. THE EXTERIOR LATH SHALL COVER AND TERMINATE ON THE ATTACHMENT FLANGE OF THE WEEP SCREED. TO BE INSTALLED PER TOWN OF PV'S APPROVED WEEP SCREED DETAIL

9. R703.8 FLASHING. APPROVED CORROSION-RESISTANT FLASHING SHALL BE APPLIED SHINGLE FASHION IN A MANNER AS TO PREVENT ENTRY OF WATER INTO THE WALL CAVITY OR PENETRATION OF WATER TO THE BUILDING STRUCTURAL FRAMING COMPONENTS. SELF-ADHERED MEMBRANES USED AS FLASHING SHALL COMPLY WITH AAMA 711.

THE FLASHING SHALL EXTEND TO THE SURFACE OF THE EXTERIOR WALL FINISH. APPROVED CORROSION-RESISTANT FLASHINGS SHALL BE INSTALLED AT ALL OF THE FOLLOWING LOCATIONS:

1. EXTERIOR WINDOW AND DOOR OPENINGS. FLASHING AT EXTERIOR WINDOW AND DOOR OPENINGS SHALL EXTEND TO THE SURFACE OF THE EXTERIOR WALL FINISH OR TO THE WATER-RESISTIVE BARRIER FOR SUBSEQUENT DRAINAGE. FLASHING AT EXTERIOR WINDOW AND DOOR OPENINGS SHALL BE INSTALLED IN ACCORDANCE WITH ONE OR MORE OF THE FOLLOWING:

1.1 THE FENESTRATION MANUFACTURER'S INSTALLATION AND FLASHING INSTRUCTIONS, OR FOR APPLICATIONS NOT ADDRESSED IN THE FENESTRATION MANUFACTURER'S INSTRUCTIONS, IN ACCORDANCE WITH THE FLASHING MANUFACTURER'S INSTRUCTIONS. WHERE FLASHING INSTRUCTIONS OR DETAILS ARE NOT PROVIDED, PAN FLASHING SHALL BE INSTALLED AT THE SILL OF EXTERIOR WINDOW AND DOOR OPENINGS. PAN FLASHING SHALL BE SEALED OR SLOPED IN SUCH A MANNER AS TO DIRECT WATER TO THE SURFACE OF THE EXTERIOR WALL FINISH OR TO THE WATER-RESISTIVE BARRIER FOR SUBSEQUENT DRAINAGE. OPENINGS USING PAN FLASHING SHALL ALSO INCORPORATE FLASHING OR PROTECTION AT THE HEAD AND SIDES.
1.2 IN ACCORDANCE WITH THE FLASHING DESIGN OR METHOD OF A REGISTERED DESIGN PROFESSIONAL.
1.3 IN ACCORDANCE WITH OTHER APPROVED METHODS.

2. AT THE INTERSECTION OF CHIMNEYS OR OTHER MASONRY CONSTRUCTION WITH FRAME OR STUCCO WALLS, WITH PROJECTING LIPS ON BOTH SIDES UNDER STUCCO COPINGS.

3. UNDER AND AT ENDS OF MASONRY, WOOD OR METAL COPINGS AND SILLS.

4. ONTINUOUSLY ABOVE ALL PROJECTING WOOD TRIM.

5. WHERE EXTERIOR PORCHES, DECKS OR STAIRS ATTACH TO A WALL OR FLOOR ASSEMBLY OF WOOD-FRAME CONSTRUCTION.

6. AT WALL AND ROOF INTERSECTIONS. 7. AT BUILT-IN GUTTERS.

MINIMUM ROOM AREAS - R304

1. R304.1 MINIUMUM AREA. EVERY DWELLING UNIT SHALL HAVE AT LEAST ONE HABITABLE ROOM THAT SHALL HAVE NOT LESS THAN 120 SQUARE FEET OF GROSS FLOOR AREA.

2. R304.2 OTHER ROOMS. OTHER HABITABLE ROOMS SHALL HAVE A FLOOR AREA OF NOT LESS THAN 70 SQUARE FEET. EXCEPTION: KITCHENS.

3. R304.3 MINIMUM DIMENSIONS. HABITABLE ROOMS SHALL NOT BE LESS THAN 7 FEET IN ANY HORIZONTAL DIMENSION. EXCEPTION: KITCHENS.

4. R304.4 HEIGHT EFFECT ON ROOM AREA. PORTIONS OF A ROOM WITH A SLOPING CEILING MEASURING LESS THAN 5 FEET OR A FURRED CEILING MEASURING LESS THAN 7 FEET FROM THE FINISHED FLOOR TO THE FINISHED CEILING SHALL NOT BE CONSIDERED AS CONTRIBUTING TO THE MINIMUM REQUIRED HABITABLE AREA FOR THAT ROOM.

MEANS OF EGRESS - R311

1. R311.1 MEANS OF EGRESS. ALL DWELLINGS SHALL BE PROVIDED WITH A MEANS OF EGRESS AS PROVIDED IN THIS SECTION. THE MEANS OF EGRESS SHALL PROVIDE A CONTINUOUS AND UNOBSTRUCTED PATH OF VERTICAL AND HORIZONTAL EGRESS TRAVEL FROM ALL PORTIONS OF THE DWELLING TO THE EXTERIOR OF THE DWELLING AT THE REQUIRED EGRESS DOOR WITHOUT REQUIRING TRAVEL THROUGH A GARAGE.

2. R311.2 EGRESS DOOR. AT LEAST ONE EGRESS DOOR SHALL BE PROVIDED FOR EACH DWELLING UNIT. THE EGRESS DOOR SHALL BE SIDE-HINGED, AND SHALL PROVIDE A MINIMUM CLEAR WIDTH OF 32 INCHES WHEN MEASURED BETWEEN THE FACE OF THE DOOR AND THE STOP, WITH THE DOOR OPEN 90 DEGREES. THE MINIMUM CLEAR HEIGHT OF THE DOOR OPENING SHALL NOT BE LESS THAN 78 INCHES IN HEIGHT MEASURED FROM THE TOP OF THE THRESHOLD TO THE BOTTOM OF THE STOP. OTHER DOORS SHALL NOT BE REQUIRED TO COMPLY WITH THESE MINIMUM DIMENSIONS. EGRESS DOORS SHALL BE READILY OPENABLE FROM INSIDE THE DWELLING WITHOUT THE USE OF A KEY OR SPECIAL KNOWLEDGE OR EFFORT.

3. R311.6 HALLWAYS. THE MINIMUM WIDTH OF A HALLWAY SHALL BE NOT LESS THAN 3 FEET FINISHED.

WATER HEATER

REQUIRED DRAIN PAN FOR WATER HEATER; PAN SHALL BE GALVANIZED STEEL PAN HAVING MINIMUM THICKNESS OF 24 GAGE OR OTHER PANS LISTED FOR SUCH USE; PAN SHALL NOT BE LESS THA 1 1/2" DEEP AND SHALL BE OF SUFFICIENT SIZE AND SHAPE TO RECIVE ALL DRIPPING OR CONDENSATION FROM THE TANK OR WATER HEATER. THE PAN SHALL BE DRAINED BY AN INDIRECT WASTE PIPE HAVING A MINIMUM DIAMETER OF 3/4"; THE PAN DRAIN SHALL EXTEND FULL-SIZE AND TERMINATE OVER A SUITABLY LOCATED INDIRECT WASTE RECEPTOR OR SHALL EXTEND TO THE EXTERIOR OF THE BUILDING AND TERMINATE NOT LESS THAN 6" AMD NOT MORE THAN 24" ABOVE THE ADJACENT GROUND SURFACE.

1. P2903.4.2 BACKFLOW PREVENTION DEVICE OR CHECK VALVE. WHERE A BACKFLOW PREVENTION DEVICE, CHECK VALVE OR OTHER DEVICE IS INSTALLED ON A WATER SUPPLY SYSTEM USING STORAGE WATER HEATING EQUIPMENT SUCH THAT THERMAL EXPANSION CAUSES AN INCREASE IN PRESSURE, A DEVICE FOR CONTROLLING PRESSURE SHALL BE INSTALLED.

WATER HEATER RELIEF VALVE DISCHARGE PIPE SHALL NOT BE SMALLER THAN THE DIAMETER OF THE OUTLET OF THE VALVE SERVED, SERVE A SINGLE RELIEF DEVISE, TO AN INDIRECT WASTE RECEPTOR OR TO THE OTUDOORS, BE INSTALLED TO FLOW BY GRAVITY, TERMINATING NOT LESS THAN 6 INCHES AND NOT MORE THAN 24 INCHES ABOVE THE FLOOR OR WASTE RECEPTOR, AND IN A MANNER THAT DOES NOT CAUSE PERSONAL INJURY OR STRUCTURAL DAMAGE. IN COMPLIANCE WITH 2803.6.1w/ToG AMENDMENT.

DRAFTSTOPPING AND FIREBLOCKING - R302.11-R302.12

1.R302.12 DRAFTSTOPPING. IN COMBUSTIBLE CONSTRUCTION WHERE THERE IS USABLE SPACE BOTH ABOVE AND BELOW THE CONCEALED SPACE OF A FLOOR/CEILING ASSEMBLY, DRAFTSTOPS SHALL BE INSTALLED SO THAT THE AREA OF THE CONCEALED SPACE DOES NOT EXCEED 1,000 SQUARE FEET. DRAFTSTOPPING SHALL DIVIDE THE CONCEALED SPACE INTO APPROXIMATELY EQUAL AREAS. WHERE THE ASSEMBLY IS ENCLOSED BY A FLOOR MEMBRANE ABOVE AND A CEILING MEMBRANE BELOW, DRAFTSTOPPING SHALL BE PROVIDED IN FLOOR/CEILING ASSEMBLIES UNDER THE FOLLOWING CIRCUMSTANCES:

1. CEILING IS SUSPENDED UNDER THE FLOOR FRAMING.
2. FLOOR FRAMING IS CONSTRUCTED OF TRUSS-TYPE OPEN-WEB OR PERFORATED MEMBERS.

2. R302.12.1 MATERIALS. DRAFT STOPPING MATERIALS SHALL NOT BE LESS THAN 1/2-INCH GYPSUM BOARD, 3/8-INCH WOOD STRUCTURAL PANELS OR OTHER APPROVED MATERIALS ADEQUATELY SUPPORTED. DRAFT STOPPING SHALL BE INSTALLED PARALLEL TO THE FLOOR FRAMING MEMBERS UNLESS OTHERWISE APPROVED BY THE BUILDING OFFICIAL. THE INTEGRITY OF THE DRAFTSTOPS SHALL BE MAINTAINED.

3. R302.11 FIREBLOCKING. IN COMBUSTIBLE CONSTRUCTION, FIREBLOCKING SHALL BE PROVIDED TO CUT OFF ALL CONCEALED DRAFT OPENINGS (BOTH VERTICAL AND HORIZONTAL) AND TO FORM AN EFFECTIVE FIRE BARRIER BETWEEN STORIES, AND BETWEEN A TOP STORY AND THE ROOF SPACE. FIRE BLOCKING SHALL BE PROVIDED IN WOOD-FRAME CONSTRUCTION IN THE FOLLOWING LOCATIONS (IRC R602.8):

1. IN CONCEALED SPACES OF STUD WALLS AND PARTITIONS, INCLUDING FURRED SPACES AND PARALLEL ROWS OF STUDS OR STAGGERED STUDS AS FOLLOWS:

1.1 VERTICALLY AT THE CEILING AND FLOOR LEVELS.
1.2 HORIZONTALLY AT INTERVALS NOT EXCEEDING 10 FEET.

2. AT ALL INTERCONNECTIONS BETWEEN CONCEALED VERTICAL AND HORIZONTAL SPACES SUCH AS OCCUR AT SOFFITS, DROP CEILINGS AND COVE CEILINGS.

3. IN CONCEALED SPACES BETWEEN STAIR STRINGERS AT THE TOP AND BOTTOM OF THE RUN. ENCLOSED SPACES UNDER STAIRS SHALL COMPLY WITH SECTION R302.7.

4. AT OPENINGS AROUND VENTS, PIPES, DUCTS, CABLES AND WIRES AT CEILING AND FLOOR LEVEL, WITH AN APPROVED MATERIAL TO RESIST THE FREE PASSAGE OF FLAME AND PRODUCTS OF COMBUSTION. THE MATERIAL FILLING THE ANNULAR SPACE SHALL NOT BE REQUIRED TO REQUIREMENTS MEET ASTM E136.

5. FOR THE FIREBLOCKING OF CHIMNEYS AND FIREPLACES, SEE SECTION R1003.19.

6. FIREBLOCKING OF CORNICES OF A TWO-FAMILY DWELLING IS REQUIRED AT THE LINE OF DWELLING UNIT SEPARATION.

4. R302.11.1 FIREBLOCKING MATERIALS. EXCEPT AS PROVIDED IN SECTION R302.11, ITEM 4, FIREBLOCKING SHALL CONSIST OF THE FOLLOWING MATERIALS:

1. TWO INCH NOMINAL LUMBER.
2. TWO THICKNESS OF 1-INCH NOMINAL LUMBER WITH BROKEN LAP JOINTS.
3. ONE THICKNESS 0F 23/32-INCH WOOD STRUCTURAL PANELS WITH JOINTS BACKED BY 23/32-INCH WOOD STRUCTURAL PANELS.
4. ONE THICKNESS OF 3/4-INCH PARTICLE BOARD WITH JOINTS BACKED BY 3/4-INCH PARTICLE BOARD.
5. 1/2-INCH GYPSUM BOARD.
6. 1/4-INCH CEMENT-BASED MILLBOARD.
7. BATTS OR BLANKETS OF MINERAL WOOD OR GLASS FIBER OR OTHER APPROVED MATERIALS INSTALLED IN SUCH A MANNER AS TO BE SECURELY RETAINED IN PLACE.
8. CELLULOSE INSULATION INSTALLED AS TESTED FOR THE SPECIFIC APPLICATION.

5. R302.11.1.1 BATTS OR BLANKETS OF MINERAL OR GLASS FIBER. BATTS OR BLANKETS OF MINERAL OR GLASS FIBER OR OTHER APPROVED NON-RIGID MATERIALS SHALL BE PERMITTED FOR COMPLIANCE WITH THE 10 FOOT HORIZONTAL FIREBLOCKING IN WALLS CONSTRUCTED USING PARALLEL ROWS OF STUDS OR STAGGERED STUDS.

6. R302.11.1.3 LOOSE-FILL INSULATION MATERIAL. LOOSE-FILL INSULATION MATERIAL SHALL NOT BE USED AS A FIRE BLOCK UNLESS SPECIFICALLY TESTED IN THE FORM AND MANNER INTENDED FOR USE TO DEMONSTRATE ITS ABILITY TO REMAIN IN PLACE AND TO RETARD THE SPREAD OF FIRE AND HOT GASES.

GARAGES AND CARPORTS

1. R302.5.1 OPENING PROTECTION. OPENINGS FROM A PRIVATE GARAGE DIRECTLY INTO A ROOM USED FOR SLEEPING PURPOSES SHALL NOT BE PERMITTED. OTHER OPENINGS BETWEEN THE GARAGE AND RESIDENCE SHALL BE EQUIPPED WITH SOLID WOOD DOORS NOT LESS THAN 1 3/8 INCHES IN THICKNESS, SOLID OR HONEYCOMB CORE STEEL DOORS NOT LESS THAN 1 3/8 INCHES THICK, OR 20-MINUTE FIRE-RATED DOORS, EQUIPPED WITH A SELF-CLOSING DEVICE.

2. R302.5.2 DUCT PENETRATION.DUCTS IN THE GARAGE AND DUCTS PENETRATING THE WALLS OR CEILINGS SEPARATING THE DWELLING FROM THE GARAGE SHALL BE CONSTRUCTED OF A MINIMUM NO. 26 GAGE SHEET STEEL OR OTHER APPROVED MATERIAL AND SHALL HAVE NO OPENINGS INTO THE GARAGE.

3. R302.6 DWELLING/GARAGE FIRE SEPARATION.THE GARAGE SHALL BE SEPARATED FROM THE RESIDENCE AND ITS ATTIC AREA BY NOT LESS THAN 5/8" GYPSUM BOARD APPLIED TO THE GARAGE SIDE. GARAGES BENEATH HABITABLE ROOMS SHALL BE SEPARATED FROM ALL HABITABLE ROOMS ABOVE BY NOT LESS THAN 5/8" TYPE X GYPSUM BOARD OR EQUIVALENT. GARAGES LOCATED LESS THAN 3 FEET FROM A DWELLING UNIT ON THE SAME LOT SHALL BE PROTECTED WITH NOT LESS THAN 5/8" GYPSUM BOARD APPLIED TO THE INTERIOR SIDE OF EXTERIOR WALLS THAT ARE WITHIN THIS AREA. OPENINGS IN THESE WALLS SHALL BE REGULATED BY SECTION R302.5 THIS PROVISION DOES NOT APPLY TO GARAGE WALLS THAT ARE PERPENDICULAR TO THE ADJACENT DWELLING UNIT WALL.

4. R309.1 FLOOR SURFACE. GARAGE FLOOR SURFACES SHALL BE OF APPROVED NONCOMBUSTIBLE MATERIAL. THE AREA OF FLOOR USED FOR PARKING OF AUTOMOBILES OR OTHER VEHICLES SHALL BE SLOPED TO FACILITATE THE MOVEMENT OF LIQUIDS TO A DRAIN OR TOWARD THE MAIN VEHICLE ENTRY DOORWAY.

5. R309.2 CARPORTS. CARPORTS SHALL BE OPEN ON AT LEAST TWO SIDES. CARPORT FLOOR SURFACES SHALL BE OF APPROVED NONCOMBUSTIBLE MATERIAL. CARPORTS NOT OPEN ON AT LEAST TWO SIDES SHALL BE CONSIDERED A GARAGE AND SHALL COMPLY WITH THE PROVISIONS OF THIS SECTION FOR GARAGES. ASPHALT SURFACES SHALL BE PERMITTED AT GROUND LEVEL IN CARPORTS. THE AREA OF FLOOR USED FOR PARKING OF AUTOMOBILES OR OTHER VEHICLES SHALL BE SLOPED TO FACILITATE THE MOVEMENT OF LIQUIDS TO A DRAIN OR TOWARD THE MAIN VEHICLE ENTRY DOORWAY.

6. R309.4 AUTOMATIC GARAGE DOOR OPENERS. AUTOMATIC GARAGE DOOR OPENERS, IF PROVIDED, SHALL BE LISTED IN ACCORDANCE WITH UL 325.

GUARDS - R312.1

1. R312.1.1 WHERE REQUIRED. GUARDS SHALL BE LOCATED ALONG OPEN-SIDED WALKING SURFACES, INCLUDING STAIRS, RAMPS AND LANDINGS, THAT ARE LOCATED MORE THAN 30 INCHES MEASURED VERTICALLY TO THE FLOOR OR GRADE BELOW AT ANY POINT WITHIN 36 INCHES HORIZONTALLY TO THE EDGE OF THE OPEN SIDE. INSECT SCREENING SHALL NOT BE CONSIDERED AS A GUARD.

2. R312.1.2 HEIGHT. REQUIRED GUARDS AT OPEN-SIDED WALKING SURFACES, INCLUDING STAIRS, PORCHES, BALCONIES OR LANDINGS, SHALL BE NOT LESS THAN 36 INCHES HIGH MEASURED VERTICALLY ABOVE THE ADJACENT WALKING SURFACE, ADJACENT FIXED SEATING OR THE LINE CONNECTING THE LEADING EDGES OF THE TREADS. EXCEPTIONS:

1. GUARDS ON THE OPEN SIDES OF STAIRS SHALL HAVE A HEIGHT NOT LESS THAN 34 INCHES MEASURED VERTICALLY FROM A LINE CONNECTING THE LEADING EDGES OF THE TREADS.

2. WHERE THE TOP OF THE GUARD ALSO SERVES AS A HANDRAIL ON THE OPEN SIDES OF STAIRS, THE TOP OF THE GUARD SHALL NOT BE NOT LESS THAN 34 INCHES AND NOT MORE THAN 38 INCHES MEASURED VERTICALLY FROM A LINE CONNECTING THE LEADING EDGES OF THE TREADS.

3. R312.1.3 OPENING LIMITATIONS. REQUIRED GUARDS SHALL NOT HAVE OPENINGS FROM THE WALKING SURFACE TO THE REQUIRED GUARD HEIGHT WHICH ALLOW PASSAGE OF A SPHERE 4-INCHES IN DIAMETER. EXCEPTIONS:

1. THE TRIANGULAR OPENINGS AT THE OPEN SIDE OF A STAIR, FORMED BY THE RISER, TRAD AND BOTTOM RAIL OF A GUARD, SHALL NOT ALLOW PASSAGE OF A SPHERE 6 INCHES IN DIAMETER.

2. GUARDS ON THE OPEN SIDES OF STAIRS SHALL NOT HAVE OPENINGS WHICH ALLOW PASSAGE OF A SPHERE 4-3/8 INCHES IN DIAMETER.

WHIRLPOOL BATHTUBS - P2720

1. P2720.1 ACCESS TO PUMP. ACCESS SHALL BE PROVIDED TO CIRCULATION PUMPS IN ACCORDANCE WITH THE FIXTURE OR PUMP MANUFACTURERS INSTALLATION INSTRUCTIONS. WHERE THE MANUFACTURER'S INSTRUCTIONS DO NOT SPECIFY THE LOCATION AND MINIMUM SIZE OF FIELD-FABRICATED ACCESS OPENINGS, A 12-INCH BY 12-INCH MINIMUM SIZE OPENING SHALL BE INSTALLED FOR ACCESS TO THE CIRCULATION PUMP. WHERE PUMPS ARE LOCATED MORE THAN 2 FEET FROM THE ACCESS OPENING, AN 18-INCH BY 18-INCH MINIMUM SIZE OPENING SHALL BE INSTALLED. A DOOR OR PANEL SHALL BE PERMITTED TO CLOSE THE OPENING. IN ALL CASES, THE ACCESS OPENING SHALL BE UNOBSTRUCTED AND BE OF THE SIZE NECESSARY TO PERMIT THE REMOVAL AND REPLACEMENT OF THE SIZE NECESSARY TO PERMIT THE REMOVAL AND REPLACEMENT OF THE CIRCULATION PUMP.

2. P2720.2 PIPING DRAINAGE. THE CIRCULATION PUMP SHALL BE ACCESSIBLY LOCATED ABOVE THE CROWN WEIR OF THE TRAP. THE PUMP DRAIN LINE SHALL BE PROPERLY GRADED TO ENSURE MINIMUM WATER RETENTION IN THE VOLUTE AFTER FIXTURE USE. THE CIRCULATION PIPING SHALL BE INSTALLED TO BE SEF-DRAINING. (PUMP TO HAVE A GFCI OUTLET).

INSULATION

1. MIN. INSULATION SHALL BE PROVIDED ADJACENT TO HABITABLE AREAS AS FOLLOWS (U.N.O.): A.) R-38 AT CEILINGS AND SOFFITS, B.) R-19 AT EXTERIOR 2x6 FRAME WALLS, AND C.) R-13 AT EXTERIOR 2x4 FRAME WALLS.

2. R806.3 VENT AND INSULATION CLEARANCE. A MINIMUM OF 1" SPACE SHALL BE PROVIDED BETWEEN THE INSULATION AND ROOF SHEATHING AT THE LOCATION EAVE OR CORNICE VENTS.

3. BUILDINGS SHALL BE INSULATED IN ACCORDANCE WITH THE IRC CHAPTER 11 AND AS AMENDED BY CITY ORDINANCE.

4. N1102.4. AIR LEAKAGE. THE BUILDING THERMAL ENVELOPE SHALL BE CONSTRUCTED TO LIMIT AIR LEAKAGE IN ACCORDANCE WITH SECTIONS N1102.4.1 THROUGH N1102.4.4. THE SEALING METHODS BETWEEN DISSIMILAR MATERIALS SHALL ALLOW FOR DIFFERENTIAL EXPANSION AND CONTRACTION.

5. N1102.4.3 FENESTRATION AIR LEAKAGE. WINDOWS, SKYLIGHTS AND SLIDING GLASS DOORS SHALL HAVE AN AIR INFILTRATION RATE OF NO MORE THAN PER SQUARE FOOT, AND SWINGING DOORS NO MORE THAN 0.5 CFM 0.3 CFM PER SQUARE FOOT, WHEN TESTED ACCORDING TO NFRC 400 OR AAMA/WDMA/CSA 101/I.S.2/A440 BY AN ACCREDITED, INDEPENDENT LABORATORY, AND LISTED AND LABELED BY THE MANUFACTURER.

6. N1102.4.4 RECESSED LIGHTING. RECESSED LUMINARIES INSTALLED IN THE BUILDING THERMAL ENVELOPE SHALL BE SEALED TO LIMIT AIR LEAKAGE BETWEEN CONDITIONED AND UNCONDITIONED SPACES. ALL RECESSED LUMINARIES SHALL BE IC-RATED AND LABELED AS HAVING AN AIR LEAKAGE RATE NOT MORE THAN 2.0 CFM WHEN TESTED IN ACCORDANCE WITH ASTM E 283 AT A 1.57 PSF PRESSURE DIFFERENTIAL. ALL RECESSED LUMINAIRES SHALL BE SEALED WITH A GASKET OR CAULK BETWEEN THE HOUSING AND THE INTERIOR WALL OR CEILING COVERING.

7. A SEPARATE INSULATION INSPECTION MAY BE REQUIRED PRIOR TO DRYWALL OR AN INSULATION CERTIFICATE MAY BE REQUIRED AT TIME OF FINAL.

GLAZING - HAZARDOUS LOCATIONS - R308.4

1. R308.4.1 GLAZING IN DOORS.GLAZING IN ALL FIXED AND OPERABLE PANELS OF SWINGING, SLIDING AND BIFOLD DOORS SHALL BE CONSIDERED A HAZARDOUS LOCATION.

EXCEPTIONS:
1. GLAZED OPENINGS OF A SIZE THROUGH WHICH A 3-INCH DIAMETER SPHERE IS UNABLE TO PASS.
2. DECORATIVE GLAZING.

2. R308.4.2 GLAZING ADJACENT DOORS. GLAZING IN AN INDIVIDUAL FIXED OR OPERABLE PANEL ADJACENT TO A DOOR WHERE THE NEAREST VERTICAL EDGE IS WITHIN A 24-INCH ARC OF EITHER VERTICAL EDGE OF THE DOOR IN A CLOSED POSITION AND WHERE THE BOTTOM EXPOSED EDGE OF THE GLAZING IS LESS THAN 60 INCHES ABOVE THE FLOOR OR WALKING SURFACE SHALL BE CONSIDERED A HAZARDOUS LOCATION.

EXCEPTIONS:
1. DECORATIVE GLAZING.
2. WHEN THERE IS AN INTERVENING WALL OR OTHER PERMANENT BARRIER BETWEEN THE DOOR AND THE GLAZING.
3. GLAZING IN WALLS ON THE LATCH SIDE OF AND PERPENDICULAR TO THE PLANE OF THE DOOR IN A CLOSED POSITION.
4. WHERE ACCESS THROUGH THE DOOR IS TO A CLOSET OR STORAGE AREA 3 FEET OR LESS IN DEPTH. GLAZING IN THIS APPLICATION SHALL COMPLY WITH . SECTION R308.4.3
5. GLAZING THAT IS ADJACENT TO THE FIXED PANEL OF PATIO DOORS.

3. R308.4.3 GLAZING IN WINDOWS.GLAZING IN AN INDIVIDUAL FIXED OR OPERABLE PANEL THAT MEETS ALL OF THE FOLLOWING CONDITIONS SHALL BE CONSIDERED A HAZARDOUS CONDITION:

1. THE EXPOSED AREA OF AN INDIVIDUAL PANE IS LARGER THAN 9 SQUARE FEET;
2. THE BOTTOM EDGE OF THE GLAZING IS LESS THAN 18 INCHES ABOVE THE FLOOR;
3. THE TOP EDGE OF THE GLAZING IS MORE THAN 36 INCHES ABOVE THE FLOOR; AND
4. ONE OR MORE WALKING SURFACES ARE WITHIN 36 INCHES, MEASURED HORIZONTALLY AND IN A STRAIGHT LINE, OF THE GLAZING.

EXCEPTIONS:

1. DECORATIVE GLAZING.
2. WHEN A HORIZONTAL RAIL IS INSTALLED ON THE ACCESSIBLE SIDE(S) OF THE GLAZING 34 TO 38 INCHES ABOVE THE WALKING SURFACE. THE RAIL SHALL BE CAPABLE OF WITHSTANDING A HORIZONTAL LOAD OF 50 POUNDS PER LINEAR FOOT WITHOUT CONTACTING THE GLASS AND BE A MINIMUM OF 1 1/2 INCHES IN CROSS SECTIONAL HEIGHT.
3. OUTBOARD PANES IN INSULATING GLASS UNITS AND OTHER MULTIPLE GLAZED PANELS WHEN THE BOTTOM EDGE OF THE GLASS IS 25 FEET OR MORE ABOVE GRADE, A ROOF, WALKING SURFACES OR OTHER HORIZONTAL [WITHIN 45 DEGREES OF HORIZONTAL] SURFACE ADJACENT TO THE GLASS EXTERIOR.

4. R308.4.4 GLAZING IN GUARDS AND RAILINGS. GLAZING IN GUARDS AND RAILINGS, INCLUDING STRUCTURAL BALUSTER PANELS AND NONSTRUCTURAL IN-FILL PANELS, REGARDLESS OF AREA OR HEIGHT ABOVE A WALKING SURFACE SHALL BE CONSIDERED A HAZARDOUS LOCATION.

5. R308.4.5 GLAZING AND WET SURFACES. GLAZING IN WALLS, ENCLOSURES OR FENCES CONTAINING OR FACING HOT TUBS, SPAS, WHIRLPOOLS, SAUNAS, STEAM ROOMS, BATHTUBS, SHOWERS AND INDOOR OR OUTDOOR SWIMMING POOLS WHERE THE BOTTOM EXPOSED EDGE OF THE GLAZING IS LESS THAN 60 INCHES MEASURED VERTICALLY ABOVE ANY STANDING OR WALKING SURFACE SHALL BE CONSIDERED A HAZARDOUS LOCATION. THIS SHALL APPLY TO SINGLE GLAZING AND ALL PANES IN MULTIPLE GLAZING.

EXCEPTION: GLAZING THAT IS MORE THAN 60 INCHES, MEASURED HORIZONTALLY AND IN A STRAIGHT LINE, FROM THE WATER'S EDGE OF A BATH TUB, SPA, WHIRLPOOL, OR SWIMMING POOL.

6. R308.4.6 GLAZING ADJACENT STAIRS AND RAMPS. GLAZING WHERE THE BOTTOM EDGE OF THE GLAZING IS LESS THAN 36 INCHES ABOVE THE PLANE OF THE ADJACENT WALKING SURFACE OF STAIRWAYS, LANDINGS BETWEEN FLIGHTS OF STAIRS AND RAMPS SHALL BE CONSIDERED A HAZARDOUS LOCATION. EXCEPTIONS: 1. WHEN A RAIL IS INSTALLED ON THE ACCESSIBLE SIDE(S) OF THE GLAZING 34 TO 38 INCHES ABOVE THE WALKING SURFACE. THE RAIL SHALL BE CAPABLE OF WITHSTANDING A HORIZONTAL LOAD OF 50 POUNDS PER LINEAR FOOT WITHOUT CONTACTING THE GLASS AND BE A MINIMUM OF 1 1/2 INCHES IN CROSS SECTIONAL HEIGHT. 2. GLAZING 36 INCHES OR MORE MEASURED HORIZONTALLY FROM THE WALKING SURFACE. 7. 7. R308.4.7 GLAZING ADJACENT TO THE BOTTOM STAIR LANDING. GLAZING ADJACENT TO THE LANDING AT THE BOTTOM OF A STAIRWAY WHERE THE GLAZING IS LESS THAN 36 INCHES ABOVE THE LANDING AND WITHIN 60 INCHES HORIZONTALLY OF THE BOTTOM TREAD SHALL BE CONSIDERED A HAZARDOUS LOCATION. EXCEPTION: THE GLAZING IS PROTECTED BY A GUARD COMPLYING WITH SECTION R312 AND THE PLANE OF THE GLASS IS MORE THAN 18 INCHES FROM THE GUARD.

FIRE-RESISTANT CONSTRUCTION - R302

1. R302.1 EXTERIOR WALLS. EXTERIOR WALLS WITH A FIRE SEPARATION DISTANCE LESS THAN 5 FEET SHALL HAVE NOT LESS THAN A ONE-HOUR FIRE-RESISTIVE RATING TESTED IN ACCORDANCE WITH ASTM E 119 OR UL 263 WITH EXPOSURE FROM BOTH SIDES.

EXCEPTIONS:

1. WALLS, PROJECTIONS, OPENINGS OR PENETRATIONS IN WALLS PERPENDICULAR TO THE LINE USED TO DETERMINE THE FIRE SEPARATION DISTANCE.
2. WALLS OF DWELLINGS AND ACCESSORY STRUCTURES LOCATED ON THE SAME LOT.
3. DETACHED TOOL SHEDS AND STORAGE SHEDS, PLAYHOUSES AND SIMILAR STRUCTURES EXEMPTED FROM PERMITS ARE NOT REQUIRED TO PROVIDE WALL PROTECTION BASED ON LOCATION ON THE LOT. PROJECTIONS BEYOND THE EXTERIOR WALL SHALL NOT EXTEND OVER THE LOT LINE.
4. DETACHED GARAGES ACCESSORY TO A DWELLING LOCATED WITHIN 2 FEET OF A LOT LINE ARE PERMITTED TO HAVE ROOF EAVE PROJECTIONS NOT EXCEEDING 4 INCHES.
5. FOUNDATION VENTS INSTALLED IN COMPLIANCE WITH 2012 IRC ARE PERMITTED.
6. CONSTRUCTION, PROJECTIONS, OPENINGS AND PENETRATIONS OF EXTERIOR WALLS OF DWELLINGS EQUIPPED THROUGHOUT WITH AN AUTOMATIC SPRINKLER SYSTEM INSTALLED IN ACCORDANCE WITH SECTION P2904 SHALL COMPLY WITH TABLE R302.1(2).

2. PROJECTIONS SHALL NOT EXTEND TO A POINT CLOSER THAN 2 FEET FROM THE LINE USED TO DETERMINE THE FIRE SEPARATION DISTANCE. PROJECTIONS EXTENDING INTO THE FIRE SEPARATION WITH A DISTANCE GREATER THAN 2 FEET AND LESS THAN OR EQUAL TO 5 FEET SHALL HAVE NOT LESS THAN ONE- HOUR FIRE-RESISTIVE CONSTRUCTION ON THE UNDERSIDE.

3. OPENINGS SHALL NOT BE PERMITTED IN THE EXTERIOR WALL OF A DWELLING OR ACCESSORY BUILDING WITH A FIRE SEPARATION DISTANCE LESS THAN 3 FEET. UNRATED OPENINGS UP TO 25 PERCENT MAXIMUM OF WALL AREA ARE ALLOWED IN EXTERIOR WALLS WITH A FIRE SEPARATION DISTANCE EQUAL TO OR GREATER THAN 3 FEET BUT LESS THAN 5 FEET. UNLIMITED UNRATED OPENINGS ARE ALLOWED IN EXTERIOR WALLS WITH A FIRE SEPARATION OF 5 FEET OR GREATER. THIS DISTANCE SHALL BE MEASURED PERPENDICULAR TO THE LINE USED TO DETERMINE THE FIRE SEPARATION DISTANCE.

4. PENETRATIONS LOCATED IN THE EXTERIOR WALL OF A DWELLING WITH A FIRE SEPARATION DISTANCE LESS THAN 5 FEET SHALL COMPLY WITH SECTION R302.4.

FLAME SPREAD AND SMOKE DENSITY

1. THE REQUIREMENTS FOR FLAME SPREAD AND SMOKE DENSITY SHALL BE GOVERNED BY THE APPLICABLE BUILDING CODE.

GLASS BLOCK PANELS - R610

1. R610.2 MATERIALS. HOLLOW GLASS UNITS SHALL BE PARTIALLY EVACUATED AND HAVE A MINIMUM AVERAGE GLASS FACE THICKNESS OF 3/16 INCH. THE SURFACE OF UNITS IN CONTACT WITH MORTAR SHALL BE TREATED WITH A POLYVINYL BUTYRAL COATING OR LATEX-BASED PAINT. THE USE OF RECLAIMED UNITS IS PROHIBITED.

2. R610.3 UNITS. HOLLOW OR SOLID GLASS BLOCK UNITS SHALL BE STANDARD OR THIN UNITS AS LISTED IN IRC R610.3.1 AND R610.3.2.

3. R610.5.1 DEFLECTION. THE MAXIMUM TOTAL DEFLECTION OF STRUCTURAL MEMBERS THAT SUPPORT GLASS UNIT MASONRY SHALL NOT EXCEED 1/600.

4. R610.5.2 LATERAL SUPPORT. GLASS UNIT MASONRY PANELS SHALL BE LATERALLY SUPPORTED ALONG THE TOP AND SIDES OF THE PANEL. LATERAL SUPPORTS FOR GLASS UNIT MASONRY PANELS SHALL BE DESIGNED TO RESIST A MINIMUM OF 200 POUNDS PER LINEAL FOOT OF PANEL, OR THE ACTUAL APPLIED LOADS, WHICHEVER IS GREATER. EXCEPT FOR SINGLE UNIT PANELS, LATERAL SUPPORT SHALL BE PROVIDED BY PANEL ANCHORS ALONG THE TOP AND SIDES SPACED A MAXIMUM OF 16 INCHES ON CENTER OR BY CHANNEL-TYPE RESTRAINTS.

EXCEPTIONS:
1. LATERAL SUPPORT IS NOT REQUIRED AT THE TOP OF PANELS THAT ARE ONE UNIT WIDE.
2. LATERAL SUPPORT IS NOT REQUIRED AT THE SIDES OF PANELS THAT ARE ONE UNIT HIGH.

R610.5.2.2 CHANNEL-TYPE RESTRAINTS. GLASS UNIT MASONRY PANELS SHALL BE RECESSED AT LEAST 1 INCH WITHIN CHANNELS AND CHASES. CHANNEL-TYPE RESTRAINTS SHALL BE OVERSIZED TO ACCOMMODATE EXPANSION MATERIAL IN THE OPENING, PACKING AND SEALANT BETWEEN THE FRAMING RESTRAINTS, AND THE GLASS UNIT MASONRY PERIMETER UNITS.

5. R610.6 SILLS. BEFORE BEDDING OF GLASS UNITS, THE SILL AREA SHALL BE COVERED WITH A WATER BASE ASPHALTIC EMULSION COATING. THE COATING SHALL BE A MINIMUM OF 1/8 INCH THICK.

6. R610.7 EXPANSION JOINTS. GLASS UNIT MASONRY PANELS SHALL BE PROVIDED WITH EXPANSION JOINTS ALONG THE TOP AND SIDES AT ALL STRUCTURAL SUPPORTS. EXPANSION JOINTS SHALL BE A MINIMUM OF 3/8 INCH IN THICKNESS AND SHALL HAVE SUFFICIENT THICKNESS TO ACCOMMODATE DISPLACEMENTS OF THE SUPPORTING STRUCTURE. EXPANSION JOINTS SHALL BE ENTIRELY FREE OF MORTAR AND OTHER DEBRIS AND SHALL BE FILLED WITH RESILIENT MATERIAL.

7. R610.8 MORTAR. GLASS UNIT MASONRY SHALL BE LAID WITH TYPE S OR N MORTAR. MORTAR SHALL NOT BE RETEMPERED AFTER INITIAL SET. MORTAR UNUSED WITHIN 1-1/2 HOURS AFTER INITIAL MIXING SHALL BE DISCARDED.

8. R610.9 REINFORCEMENT. GLASS UNIT MASONRY PANELS SHALL HAVE HORIZONTAL JOINT REINFORCEMENT SPACED A MAXIMUM OF 16 INCHES ON CENTER LOCATED IN THE MORTAR BED JOINT. HORIZONTAL JOINT REINFORCEMENT SHALL EXTEND THE ENTIRE LENGTH OF THE PANEL BUT SHALL NOT EXTEND ACROSS EXPANSION JOINTS. LONGITUDINAL WIRES SHALL BE LAPPED A MINIMUM OF 6 INCHES AT SPLICES. JOINT REINFORCEMENT SHALL BE PLACED IN THE BED JOINT IMMEDIATELY BELOW AND ABOVE OPENINGS IN THE PANEL. THE REINFORCEMENT SHALL HAVE NOT LESS THAN TWO PARALLEL LONGITUDINAL WIRES OF SIZE W1.7 OR GREATER, AND HAVE WELDED CROSS WIRES OF SIZE W1.7 OR GREATER.

9. R610.10 PLACEMENT. GLASS UNITS SHALL BE PLACED SO HEAD AND BED JOINTS ARE FILLED SOLIDLY. MORTAR SHALL NOT BE FURROWED. HEAD AND BED JOINTS OF GLASS UNIT MASONRY SHALL BE 1/4 INCH THICK, EXCEPT THAT VERTICAL JOINT THICKNESS OF RADIAL PANELS SHALL NOT BE LESS THAN 1/8 INCH OR GREATER THAN 5/8 INCH. THE BED JOINT THICKNESS TOLERANCE SHALL BE MINUS 1/16 INCH AND PLUS 1/8 INCH. THE HEAD JOINT THICKNESS TOLERANCE SHALL BE PLUS OR MINUS 1/8 INCH.

LIGHT AND VENTILATION - R303

1. R303.1 HABITABLE ROOMS. ALL HABITABLE ROOMS SHALL HAVE AN AGGREGATE GLAZING AREA OF NOT LESS THAN 8 PERCENT OF THE FLOOR AREA OF SUCH ROOMS. NATURAL VENTILATION SHALL BE THROUGH WINDOWS, DOORS, LOUVERS, OR OTHER APPROVED OPENINGS TO THE OUTDOOR AIR. SUCH OPENINGS SHALL BE PROVIDED WITH READY ACCESS OR SHALL OTHERWISE BE READILY CONTROLLABLE BY THE BUILDING OCCUPANTS. THE MINIMUM OPENABLE AREA TO THE OUTDOORS SHALL BE 4 PERCENT OF THE FLOOR AREA BEING VENTILATED.

EXCEPTIONS:
1. THE GLAZED AREAS NEED NOT BE OPERABLE WHERE THE OPENING IS NOT REQUIRED BY SECTION R310 AND A WHOLE-HOUSE MECHANICAL VENTILATION SYSTEM IS INSTALLED IN ACCORDANCE WITH SECTION M1507.
2. THE GLAZED AREAS NEED NOT BE PROVIDED IN ROOMS WHERE EXCEPTION 1 ABOVE IS SATISFIED AND ARTIFICIAL LIGHT IS PROVIDED CAPABLE OF PRODUCING AN AVERAGE ILLUMINATION OF 6 FOOTCANDLES (65 LUX) OVER THE AREA OF THE ROOM AT A HEIGHT OF 30 INCHES ABOVE THE FLOOR LEVEL.
3. USE OF SUNROOM ADDITIONS AND PATIO COVERS, AS DEFINED IN SECTION R202, SHALL BE PERMITTED FOR NATURAL VENTILATION IF IN EXCESS OF 40 PERCENT OF THE EXTERIOR SUNROOM WALLS ARE OPEN, OR ARE ENCLOSED ONLY BY INSECT SCREENING.

2. R302.2 ADJOINING ROOMS. FOR THE PURPOSE OF DETERMINING LIGHT AND VENTILATION REQUIREMENTS, ANY ROOM SHALL BE CONSIDERED AS A PORTION OF AN ADJOINING ROOM WHEN AT LEAST ONE-HALF OF THE AREA OF THE COMMON WALL IS OPEN AND UNOBSTRUCTED AND PROVIDES AN OPENING OF NOT LESS THAN ONE-TENTH OF THE FLOOR AREA OF THE INTERIOR ROOM BUT NOT LESS THAN 25 SQUARE FEET. EXCEPTION: OPENINGS REQUIRED FOR LIGHT AND/OR VENTILATION SHALL BE PERMITTED TO OPEN INTO A SUNROOM WITH THERMAL ISLOATION OR A PATIO COVER, PROVIDED THAT THERE IS AN OPENABLE AREA BETWEEN THE ADJOINING ROOM AND THE SUNROOM ADDITION OR PATIO COVER OF NOT LESS THAN ONE-TENTH OF THE FLOOR AREA OF THE INTERIOR ROOM BUT NOT LESS THAN 20 SQUARE FEET. THE MINIMUM OPENABLE AREA TO THE OUTDOORS SHALL BE BASED UPON THE TOTAL FLOOR AREA BEING VENTILATED.

3. R303.3 BATHROOMS. BATHROOMS, WATER CLOSET COMPARTMENTS AND OTHER SIMILAR ROOMS SHALL BE PROVIDED WITH AGGREGATE GLAZING AREA IN WINDOWS OF NOT LESS THAN 3 SQUARE FEET, ONE-HALF OF WHICH MUST BE OPERABLE.

EXCEPTION:THE GLAZED AREAS SHALL NOT BE REQUIRED WHERE ARTIFICIAL LIGHT AND A MECHANICAL VENTILATION YSTEM ARE PROVIDED. THE MINIMUM VENTILATION RATES SHALL BE DETERMINED IN ACCORDANCE WITH SECTION M1507. EXHAUST AIR FROM THE SPACE SHALL BE EXHAUSTED DIRECTLY TO THE OUTDOORS.

FACTORY-BUILT (PRE-FAB.) FIREPLACES - R1004 & R1006

NOTE: FIREPLACE GAS VALVES SHALL BE LOCATED OUTSIDE OF REQUIRED HEARTH AREA, BUT NOT MORE THAN 72" FROM GAS OUTLET. IN COMPLIANCE WITH G2420.1.3 & G2420.5

1. R1004.1 GENERAL. FACTORY BUILT FIREPLACES SHALL BE LISTED AND LABELED AND SHALL BE INSTALLED IN ACCORDANCE WITH THE CONDITIONS OF THE LISTING. FACTORY BUILT FIREPLACES SHALL BE TESTED IN ACCORDANCE WITH UL 127.

2. R1004.2 HEARTH EXTENSIONS. HEARTH EXTENSIONS OF APPROVED FACTORY-BUILT FIREPLACES SHALL BE INSTALLED IN ACCORDANCE WITH THE LISTING OF THE FIREPLACE. THE HEARTH EXTENSION SHALL BE READILY DISTINGUISHABLE FROM THE SURROUNDING FLOOR AREA.

3. R1004.3 DECORATIVE SHROUDS. DECORATIVE SHROUDS SHALL NOT BE INSTALLED AT THE TERMINATION OF CHIMNEYS FOR FACTORY BUILT FIREPLACES EXCEPT WHERE SUCH SHROUDS ARE LISTED AND LABELED FOR USE WITH THE SPECIFIED FACTORY BUILT FIREPLACE SYSTEM AND INSTALLED IN ACCORDANCE WITH THE MANUFACTURER'S INSTALLATION INSTRUCTIONS.

4. R1004.4 UNVENTED GAS LOG HEATERS. AN UNVENTED GAS LOG HEATER SHALL NOT BE INSTALLED IN A FACTORY BUILT FIREPLACE UNLESS THE FIREPLACE SYSTEM HAS BEEN SPECIFICALLY TESTED, LISTED AND LABELED FOR SUCH USE IN ACCORDANCE WITHUL 127.

5. R1006.1 EXTERIOR AIR. FACTORY BUILT OR MASONRY FIREPLACES COVERED IN THIS CHAPTER SHALL BE EQUIPPED WITH AN EXTERIOR AIR SUPPLY TO ASSURE PROPER FUEL COMBUSTION UNLESS THE ROOM IN MECHANICALLY VENTILATED AND CONTROLLED SO THAT THE INDOOR PRESSURE IS NEUTRAL OR POSITIVE.

R1006.1.1. EXTERIOR COMBUSTION AIR DUCTS FOR FACTORY BUILT FIREPLACES SHALL BE A LISTED COMPONENT OF THE FIREPLACE AND SHALL BE INSTALLED ACCORDING TO THE FIREPLACE MANUFACTURER'S INSTRUCTIONS.

6. R1006.2 EXTERIOR AIR INTAKE. THE EXTERIOR AIR INTAKE SHALL BE CAPABLE OF SUPPLYING PROVIDING ALL COMBUSTION AIR FROM THE EXTERIOR OF THE DWELLING OR FROM SPACES WITHIN THE DWELLING VENTILATED WITH OUTSIDE AIR SUCH AS NON MECHANICALLY VENTILATED CRAWL OR ATTIC SPACES. THE EXTERIOR AIR INTAKE SHALL NOT BE LOCATED WITHIN THE GARAGE OR BASEMENT OF THE DWELLING NOR SHALL THE AIR INTAKE BE LOCATED AT AN ELEVATION HIGHER THAN THE FIREBOX. THE EXTERIOR AIR INTAKE SHALL BE COVERED WITH A CORROSION-RESISTANT SCREEN OF 1/4 INCH MESH.

7. R1006.3 CLEARANCE. UNLISTED COMBUSTION AIR DUCTS SHALL BE INSTALLED WITH A MINIMUM 1 INCH CLEARANCE TO COMBUSTIBLES FOR ALL PARTS OF THE DUCT WITHIN 5 FEET OF THE DUCT OUTLET.

8. R1006.4 PASSAGEWAY. THE COMBUSTION AIR PASSAGEWAY SHALL BE A MINIMUM OF 6 SQUARE INCHES AND NOT MORE THAN 55 SQUARE INCHES, EXCEPT THAT COMBUSTION AIR SYSTEMS FOR LISTED FIREPLACES SHALL BE CONSTRUCTED ACCORDING TO THE FIREPLACE MANUFACTURER'S INSTRUCTIONS.

9. R1006.5 OUTLET. THE EXTERIOR AIR OUTLET IS PERMITTED TO BE LOCATED AT THE BACK OR SIDES OF THE FIREBOX CHAMBER OR WITHIN 24 INCHES OF THE FIREBOX OPENING ON OR NEAR THE FLOOR. THE OUTLET SHALL BE CLOSABLE AND DESIGNED TO PREVENT BURNING MATERIAL FROM DROPPING INTO CONCEALED COMBUSTIBLE SPACES.

FUEL GAS - IRC CHAPTER 24

1. PROVIDE NATURAL GAS TO APPLIANCES SHOWN ON FLOOR PLAN. GAS LINES SHALL CONFORM TO IRC CHAPTER 24 FOR MATERIALS, INSTALLATION, AND TESTING. ALL EXPOSED GAS PIPING SHALL BE KEPT AT LEAST 3 1/2 . INCHES ABOVE GRADE OR STRUCTURE PER SECTION G2415.9

2. G2415.14 PIPING UNDERGROUND BENEATH BUILDINGS. PIPING INSTALLED UNDERGROUND BENEATH BUILDINGS IS PROHIBITED EXCEPT WHERE THE PIPING IS ENCASED IN A CONDUIT OF WROUGHT IRON, PLASTIC PIPE, STEEL PIPE OR OTHER APPROVED CONDUIT MATERIAL DESIGNED TO WITHSTAND THE SUPERIMPOSED LOADS. THE PIPING SHALL BE PROTECTED FROM CORROSION IN ACCORDANCE WITH SECTION G2415.11 AND SHALL BE INSTALLED IN ACCORDANCE WITH SECTION G2415.14.1 OR G2415.14.2.

3. KITCHEN ISLANDS. WHEN NECESSARY DUE TO STRUCTURAL CONDITIONS, THE I.P.C. PERMITS THE LOCAL JURISDICTION TO APPROVE ALTERNATE LOCATIONS (IF APPLICABLE) AT UNDER SLAB GAS PIPING LOCATIONS WHERE KITCHEN ISLAND CONFIGURATIONS OCCUR. UNDER THESE CONDITIONS, THE FOLLOWING PROVISIONS SHALL GOVERN THE INSTALLATION OF GAS PIPING UNDER CONCRETE SLABS PER CITY APPROVAL:

1. THE GAS PIPING SHALL BE ENCASED IN A RIGID PLASTIC (SCHED. 40 MIN.) SLEEVE WITH A DIAMETER AT LEAST TWO (2) PIPE SIZES LARGER THAN THE GAS PIPING.
2. THE GAS PIPING SHALL BE COMPLETELY SEALED ON EACH END BY THE USE OF GAS TIGHT COUPLINGS. THE EXTERIOR END OF THE SLEEVE SHALL BE PROVIDED WITH A MINIMUM 1-INCH EXTERIOR VENT OPENING, TERMINATING FROM A VERTICAL ARM AND FACING DOWNWARD A MINIMUM OF 18 INCHES ABOVE FINISHED GRADE.
3. THE SLEEVE AND GAS PIPING SHALL BE SECURED IN A STABLE POSITION AND AIR PRESSURE TESTED SEPARATELY AND INDEPENDENTLY IN . ACCORDANCE WITH THE 2012 I.P.C
4. THERE SHALL BE NO HORIZONTAL BRANCHES INSTALLED BELOW THE FLOOR, AND NOT MORE THAN ONE PENETRATION OF THE INTERIOR FLOOR SHALL BE PERMITTED. WHERE THE SLEEVE AND ENCASED PIPE TERMINATES WITHIN A BUILDING, IT SHALL BE ACCESSIBLE.
5. LP GAS LINES SHALL NOT BE PERMITTED.

4. G2414.1 GENERAL. MATERIALS USED FOR PIPING SYSTEMS SHALL COMPLY WITH THE REQUIREMENTS OF IRC CHAPTER 24 OR SHALL BE APPROVED.

5. M1305 APPLIANCE ACCESS. PROVIDE 22"x30" ACCESS TO HVAC EQUIPMENT THAT REQUIRES SERVICING IN ATTIC SPACE(S) ALONG WITH SOLID FLOORING NOT LESS THAN 24" WIDE AND NOT LONGER THAN 20 FEET FROM THE ACCESS OPENING TO THE HVAC EQUIPMENT. PROVIDE A WORKING PLATFORM, CATWALK, PERMANENT ELECTRICAL OUTLET AND A LIGHT FIXTURE IN ATTIC AREAS AT HVAC EQUIPMENT THAT REQUIRES SERVICING, CONTROLLED BY A SWITCH AT THE ACCESS OPENING.

6. G2407 COMBUSTION, VENTILATION AND DILUTION AIR. PROVIDE COMBUSTION AND VENTILATION AIR FOR GAS FURNACE IN THE ATTIC.

PROTECTION OF WOOD AND WOOD BASED PRODUCTS AGAINST DECAY - R317

1. R317.1 LOCATION REQUIRED. PROTECTION OF WOOD AND WOOD BASED PRODUCTS FROM DECAY SHALL BE PROVIDED IN THE FOLLOWING LOCATIONS BY THE USE OF NATURALLY DURABLE WOOD OR WOOD THAT IS PRESERVATIVE-TREATED IN ACCORDANCE WITH AWPA U1 FOR THE SPECIES, PRODUCT, PRESERVATIVE AND END USE. PRESERVATIVES SHALL BE LISTED IN SECTION 4 OF AWPA U1.

1. WOOD JOISTS OR THE BOTTOM OF WOOD STRUCTURAL FLOOR WHEN CLOSER THAN 18 INCHES OR WOOD GIRDERS WHEN CLOSER THAN 12 INCHES TO THE EXPOSED GROUND IN CRAWL SPACES OR UNEXCAVATED AREA LOCATED WITHIN THE PERIPHERY OF THE BUILDING FOUNDATION.
2. ALL WOOD FRAMING MEMBERS THAT REST ON CONCRETE OR MASONRY EXTERIOR FOUNDATION WALLS AND ARE LESS THAN 8 INCHES FROM THE EXPOSED GROUND.
3. SILLS AND SLEEPERS ON A CONCRETE OR MASONRY SLAB THAT IS IN DIRECT CONTACT WITH THE GROUND UNLESS SEPARATED FROM SUCH SLAB BY AN IMPERVIOUS MOISTURE BARRIER.
4. THE ENDS OF WOOD GIRDERS ENTERING EXTERIOR MASONRY OR CONCRETE WALLS HAVING CLEARANCE OF LESS 1/2 INCH ON TOP, SIDES AND ENDS.
5. WOOD SIDING, SHEATHING AND WALL FRAMING ON THE EXTERIOR OF A BUILDING HAVING A CLEARANCE OF LESS THAN 6 INCHES FROM THE GROUND OR LESS THAN 2 INCHES MEASURED VERTICALLY FROM CONCRETE STEPS, PORCH SLABS, PATIO SLABS, AND SIMILAR HORIZONTAL SURFACES EXPOSED TO THE WEATHER.
6. WOOD STRUCTURAL MEMBERS SUPPORTING MOISTURE- PERMEABLE FLOORS OR ROOFS THAT ARE EXPOSED TO THE WEATHER, SUCH AS CONCRETE OR MASONRY SLABS UNLESS SEPARATED FROM SUCH FLOORS OR ROOFS BY AN IMPERVIOUS MOISTURE BARRIER.
7. WOOD FURRING STRIPS OR OTHER WOOD FRAMING MEMBERS ATTACHED DIRECTLY TO THE INTERIOR OF EXTERIOR MASONRY WALLS OR CONCRETE WALL BELOW GRADE EXCEPT WHERE AN APPROVED VAPOR RETARDER IS APPLIED BETWEEN THE WALL AND THE FURRING STRIPS OR FRAMING MEMBERS.

2. R317.1.2 GROUND CONTACT. ALL WOOD IN CONTACT WITH THE GROUND, EMBEDDED IN CONCRETE IN DIRECT CONTACT WITH THE GROUND OR EMBEDDED IN CONCRETE EXPOSED TO THE WEATHER THAT SUPPORTS PERMANENT STRUCTURES INTENDED FOR HUMAN OCCUPANCY SHALL BE APPROVED PRESSURE-PRESERVATIVE-TRATED WOOD SUITABLE FOR GROUND CONTACT USE, EXCEPT UNTREATED WOOD MAY BE USED WHERE ENTIRELY BELOW GROUNDWATER LEVEL OR CONTINUOUSLY SUBMERGED IN FRESH WATER

3. R317.1.4 WOOD COLUMNS. WOOD COLUMNS SHALL BE APPROVED WOOD OF NATURAL DECAY RESISTANCE OR APPROVED PRESSURE-PRESERVATIVE- TREATED WOOD.

EXCEPTIONS:
1. COLUMNS EXPOSED TO THE WEATHER OR IN BASEMENTS WHEN SUPPORTED BY PIERS OR METAL PEDESTALS PROJECTING 1 INCH ABOVE EXPOSED EARTH, AND ARE THE EARTHS COVERED HERE FROM BY AN APPROVED IMPERVIOUS MOISTURE BARRIER.
2. COLUMNS IN ENCLOSED CRAWL SPACES OR UNEXCAVATED AREAS LOCATED WITHIN THE PERIPHERY OF THE BUILDING WHEN SUPPORTED BY A CONCRETE PIER OR METAL PEDESTAL AT A HEIGHT MORE THAN 8 INCHES FROM EXPOSED EARTH AND FROM BY AN IMPERVIOUS MOISTURE BARRIER.

4. R317.3.1 FASTENERS FOR PRESERVATIVE-TREATED WOOD. FASTENERS FOR PRESERVATIVE-TREATED WOOD SHALL BE OF HOT DIPPED ZINC-COATED GALVANIZED STEEL, STAINLESS STEEL, SILICON BRONZE OR COPPER. COATING TYPES AND WEIGHTS FOR CONNECTORS IN CONTACT WITH PRESERVATIVE-TREATED WOOD SHALL BE IN ACCORDANCE WITH THE CONNECTOR MANUFACTURERS'S RECOMMENDATIONS. IN THE ABSENCE OF MANUFACTURER'S RECOMMENDATIONS, A MINIMUM OF ASTM A 653 TYPE G185 ZINC-CAOTED GALVANIZED STEEL, OR EQUIVALENT, SHALL BE USED.

EXCEPTIONS:
1. ONE HALF INCH DIAMETER OR GREATER STEEL BOLTS.
2. FASTENERS OTHER THAN NAILS AND TIMBER RIVETS SHALL BE PERMITTED TO BE OF MECHANICALLY DEPOSITED ZINC COATED STEEL WITH COATING WEIGHTS IN ACCORDANCE WITH ASTM B 695, CLASS 55 MINIMUM.

WEATHER-RESISTIVE BARRIERS

1. A WEATHER-RESISTIVE BARRIER IS REQUIRED UNDER ALL THIN COAT STUCCO SYSTEMS.

2. THIS WEATHER-RESISTIVE BARRIER SHALL BE APPLIED OVER ALL OPEN STUD FRAMING AND ALL WOOD BASED WALL SHEATHING.

3. OPEN STUD FRAMING SHALL RECEIVE 1 LAYER OF GRADE "D" KRAFT WATER-PROOF BUILDING PAPER. WOOD SHEATHED FRAMING SHALL RECEIVE 2 LAYERS OF GRADE "D" WATERPROOF BUILDING PAPER. IN-LIEU THEREOF, 1 LAYER OF ASTM TYPE 15 ASPHALT-SATURATED ORGANIC FELT MAY BE APPLIED OR OTHER WEATHER- RESISTIVE BARRIER CONFORMING TO I.R.C. SECTION R703.2 AND SECTION R703.4.

PROTECTION AGAINST SUBTERRANEAN TERMITES - R318

1. R318.1. PROTECTION SHALL BE BY CHEMICAL TERMITICIDE TREATMENT, TERMITE BAITING SYSTEM INSTALLED AND MAINTAINED ACCORDING TO THE LABEL, PRESSURE-PRESERVATIVE-TREATED WOOD, NATURALLY DURABLE TERMITE-RESISTANT WOOD, PHYSICAL BARRIERS (SUCH AS METAL OR PLASTIC TERMITE SHIELDS), OR COLD-FORMED STEEL FRAMING, OR ANY COMBINATION OF THESE METHODS.

2. R318.2. THE CONCENTRATION, RATE OF APPLICATION AND METHOD OF TREATMENT OF THE CHEMICAL TERMITICIDE SHALL BE IN STRICT ACCORDANCE WITH THE TERMITICIDE LABEL.

3. R318.1.2. FIELD CUT ENDS, NOTCHES AND DRILLED HOLES OF PRESSURE-PRESERVATIVE-TREATED WOOD SHALL BE RETREATED IN THE FIELD IN ACCORDANCE WITH AWPA M4.

WEEP SCREEDS

1. WEEP SCREEDS ARE REQUIRED AT ALL THIN COAT STUCCO SYSTEMS.

2. SEE PARADISE VALLEY SPECIFIC DETAIL - SHEET A1.4

SITE ADDRESS - R319

1. R319.1 ADDRESS NUMBERS. BUILDINGS SHALL HAVE APPROVED ADDRESS NUMBERS, BUILDING NUMBERS OR APPROVED BUILDING IDENTIFICATION PLACED IN A POSITION THAT IS PLAINLY LEGIBLE AND VISIBLE FROM THE STREET OR ROAD FRONTING THE PROPERTY. THESE NUMBERS SHALL CONTRAST WITH THEIR BACKGROUND. ADDRESS NUMBERS SHALL BE ARABIC NUMBERS OR ALPHABETICAL LETTERS. NUMBERS SHALL BE A MINIMUM OF 4-INCHES HIGH WITH A MINIMUM STROKE WIDTH OF 1/2 INCH. WHERE ACCESS IS BY MEANS OF A PRIVATE ROAD AND THE BUILDING ADDRESS CANNOT BE VIEWED FROM THE PUBLIC WAY, A MONUMENT, POLE OR OTHER SIGN OR MEANS SHALL BE USED TO IDENTIFY THE STRUCTURE.

brianscottdesign
4127 E. Mesquite St.
Gilbert, AZ 85296
602-999-1690
bromney@brianscottdesign.com

KASNOFF RESIDENCE

15546 E. TELEGRAPH DR.
FOUNTAIN HILLS, AZ.
85268

TITLE: GENERAL ARCHITECTURAL NOTES
KASNOFF RESIDENCE

DATE: 8/06/21

1
2
3

APPROVED
07/11/2022
TOWN OF FOUNTAIN HILLS INC. 1989 All that is Arizona

SHEET NUMBER

C1.2

ARCHITECTURAL

ROOF ASSEMBLIES - R902-R906

1. R902.1 ROOF COVERING MATERIALS. ROOFS SHALL BE COVERED WITH MATERIALS AS SET FORTH IN SECTIONS R904 AND R905. CLASS A, B OR C ROOFING SHALL BE INSTALLED IN AREAS DESIGNATED BY LAW AS REQUIRING THEIR USE OR WHEN THE EDGE OF THE ROOF IS LESS THAN 3 FEET FROM A LOT LINE. CLASSES A, B AND C ROOFING REQUIRED BY THIS SECTION TO BE LISTED SHALL BE TESTED IN ACCORDANCE WITH UL 790 OR ASTM E108.

EXCEPTIONS:
1. CLASS A ROOF ASSEMBLIES INCLUDE THOSE WITH COVERINGS OF BRICK, MASONRY, AND EXPOSED CONCRETE ROOF DECK.
2. CLASS A ROOF ASSEMBLIES ALSO INCLUDE FERROUS OR COPPER SHINGLES OR SHEETS, METAL SHEETS AND SHINGLES, CLAY OR CONCRETE ROOF TILE, OR SLATE INSTALLED ON NONCOMBUSTIBLE ROOF DECKS.
3. CLASS A ROOF ASSEMBLIES INCLUDE MINIMUM 16 OZ/SQUARE FEET COPPER SHEETS INSTALLED OVER COMBUSTIBLE DECKS.

2. R903.1 GENERAL. ROOF DECKS SHALL BE COVERED WITH APPROVED ROOF COVERINGS SECURED TO THE BUILDING OR STRUCTURE. ROOF ASSEMBLIES SHALL BE DESIGNED AND INSTALLED IN ACCORDANCE WITH CODE AND WITH THE APPROVED MANUFACTURER'S INSTALLATION INSTRUCTIONS SUCH THAT THE ROOF ASSEMBLY SHALL SERVE TO PROTECT THE BUILDING OR STRUCTURE.

3. R903.2 FLASHING. FLASHINGS SHALL BE INSTALLED IN A MANNER THAT PREVENTS MOISTURE FROM ENTERING THE WALL AND ROOF THROUGH JOINTS IN COPINGS, THROUGH MOISTURE PERMEABLE MATERIALS, AND AT INTERSECTIONS WITH PARAPET WALLS AND OTHER PENETRATIONS THROUGH THE ROOF PLANE.

R903.2.1 LOCATIONS. FLASHING SHALL BE INSTALLED AT WALL AND ROOF INTERSECTIONS, WHEREVER THERE IS A CHANGE IN ROOF SLOPE OR DIRECTION AND AROUND ROOF OPENINGS. A FLASHING SHALL BE INSTALLED TO DIVERT THE WATER AWAY FROM WHERE THE EAVE OF A SLOPED ROOF INTERSECTS A VERTICAL SIDEWALL. WHERE FLASHING IS OF METAL, THE METAL SHALL BE CORROSION RESISTANT WITH A THICKNESS OF NOT LESS THAN 0.019 INCH (NO. 26 GALVANIZED SHEET).

4. R903.3 COPING. PARAPET WALLS SHALL BE PROPERLY COPED WITH NONCOMBUSTIBLE, WEATHERPROOF MATERIALS OF A WIDTH NO LESS THAN THE THICKNESS OF THE PARAPET WALL.

5. R903.4 ROOF DRAINAGE. UNLESS ROOFS ARE SLOPED TO DRAIN OVER ROOF EDGES, ROOF DRAINS SHALL BE INSTALLED AT EACH LOW POINT OF THE ROOF.

R903.4.1 SECONDARY (EMERGENCY OVERFLOW) DRAINS OR SCUPPERS. WHERE ROOF DRAINS ARE REQUIRED, SECONDARY EMERGENCY OVERFLOW ROOF DRAINS OR SCUPPERS SHALL BE PROVIDED WHERE THE ROOF PERIMETER CONSTRUCTION EXTENDS ABOVE THE ROOF IN SUCH A MANNER THAT WATER WILL BE ENTRAPPED IF THE PRIMARY DRAINS ALLOW BUILDUP FOR ANY REASON. OVERFLOW DRAINS HAVING THE SAME SIZE AS THE ROOF DRAINS SHALL BE INSTALLED WITH THE INLET FLOW LINE LOCATED 2 INCHES ABOVE THE LOW POINT OF THE ROOF, OR OVERFLOW SCUPPERS HAVING THREE TIMES THE SIZE OF THE ROOF DRAINS AND HAVING A MINIMUM OPENING HEIGHT OF 4 INCHES SHALL BE INSTALLED IN THE ADJACENT PARAPET WALLS WITH THE INLET FLOW LOCATED 2 INCHES ABOVE THE LOW POINT OF THE ROOF SERVED. THE INSTALLATION AND SIZING OF OVERFLOW DRAINS, LEADERS AND CONDUCTORS SHALL COMPLY WITH SECTIONS 1106 AND 1108 AS APPLICABLE OF THE INTERNATIONAL PLUMBING CODE. OVERFLOW DRAINS SHALL DISCHARGE TO AN APPROVED LOCATION AND SHALL NOT BE CONNECTED TO ROOF DRAIN LINES.

6. R904.2 COMPATIBILITY OF MATERIALS. ROOF ASSEMBLIES SHALL BE OF MATERIALS THAT ARE COMPATIBLE WITH EACH OTHER AND WITH THE BUILDING OR STRUCTURE TO WHICH THE MATERIALS ARE APPLIED.

7. R904.4 PRODUCT IDENTIFICATION. ROOF COVERING MATERIALS SHALL BE DELIVERED IN PACKAGES BEARING THE MANUFACTURER'S IDENTIFYING MARKS AND APPROVED TESTING AGENCY LABELS WHEN REQUIRED. BULK SHIPMENTS OF MATERIALS SHALL BE ACCOMPANIED WITH THE SAME INFORMATION ISSUED IN THE FORM OF CERTIFICATE OR ON A BILL OF LADING BY THE MANUFACTURER.

8. R905.3 CLAY AND CONCRETE TILE.
1. R905.3.1. CONCRETE AND CLAY TILE SHALL BE INSTALLED ONLY OVER SOLID SHEATHING OR SPACED STRUCTURAL SHEATHING BOARDS.
2. R905.3.2. CLAY AND CONCRETE ROOF TILE SHALL BE INSTALLED ON ROOF SLOPES OF TWO AND ONE-HALF UNITS VERTICAL IN 12 UNITS HORIZONTAL (2 1/2:12) OR GREATER. FOR ROOF SLOPES FROM TWO AND ONE-HALF UNITS VERTICAL IN 12 UNITS HORIZONTAL (2 1/2:12) TO FOUR UNITS VERTICAL IN 12 UNITS HORIZONTAL (4:12), DOUBLE UNDERLAYMENT APPLICATION IS REQUIRED IN ACCORDANCE WITH SECTION R905.3.3.
3. UNLESS OTHERWISE NOTED, REQUIRED UNDERLAYMENT SHALL CONFORM WITH ASTM D226, TYPE II; ASTM D2626, TYPE I; OR ASTM D6380 CLASS M MINERAL SURFACED ROLL ROOFING.
1. R905.3.3.1 LOW SLOPE ROOFS. FOR ROOF SLOPES FROM TWO AND ONE-HALF UNITS VERTICAL IN 12 UNITS HORIZONTAL (2 1/2:12), UP TO FOUR UNITS VERTICAL IN 12 UNITS HORIZONTAL (4:12), UNDERLAYMENT SHALL BE A MINIMUM OF TWO LAYERS UNDERLAYMENT APPLIES AS FOLLOWS:
A. STARTING AT THE EAVE, A 19-INCH STRIP OF UNDERLAYMENT SHALL BE APPLIED PARALLEL WITH THE EAVE AND FASTENED SUFFICIENTLY IN PLACE.
B. STARTING AT THE EAVE, 36-INCH WIDE STRIPS OF UNDERLAYMENT FELT SHALL BE APPLIED, OVERLAPPING SUCCESSIVE SHEETS 19 INCHES, AND FASTENED SUFFICIENTLY IN PLACE.
2. R905.3.3.2 HIGH SLOPE ROOFS. FOR ROOF SLOPES OF FOUR UNITS VERTICAL IN 12 UNITS HORIZONTAL (4:12) OR GREATER, UNDERLAYMENT SHALL BE A MINIMUM OF ONE LAYER OF UNDERLAYMENT FELT APPLIED SHINGLE FASHION, PARALLEL TO AND STARTING FROM THE EAVES AND LAPPED 2 INCHES, FASTENED SUFFICIENTLY IN PLACE.
4. R905.3.4. CLAY ROOF TILE SHALL COMPLY WITH ASTM C1167.
5. R905.3.5. CONCRETE ROOF TILE SHALL COMPLY WITH ASTM C1492
6. R905.3.6. NAILS SHALL BE CORROSION-RESISTANT AND NOT LESS THAN 11 GAGE, 5/16-INCH HEAD, AND OF SUFFICIENT LENGTH TO PENETRATE THE DECK A MINIMUM OF 3/4 INCH OR THROUGH THE THICKNESS OF THE DECK, WHICHEVER IS LESS. ATTACHING WIRE FOR CLAY OR CONCRETE TILE SHALL NOT BE SMALLER THAN 0.083 INCH. PERIMETER FASTENING AREAS INCLUDE THREE TILE COURSES BUT NOT LESS THAN 36 INCHES FROM EITHER SIDE OF HIPS OR RIDGES AND EDGES OF EAVES AND GABLE RAKES.
7. R905.3.7. TILE SHALL BE APPLIED IN ACCORDANCE WITH CODE AND THE MANUFACTURER'S INSTALLATION INSTRUCTIONS, BASED ON THE FOLLOWING:
1. CLIMATIC CONDITIONS.
2. ROOF SLOPE
3. UNDERLAYMENT SYSTEM.
4. TYPE OF TILE BEING INSTALLED. CLAY AND CONCRETE ROOF TILES SHALL BE FASTENED IN ACCORDANCE WITH THIS SECTION AND THE MANUFACTURER'S INSTALLATION INSTRUCTIONS. PERIMETER TILES SHALL BE FASTENED WITH A MINIMUM OF ONE FASTENER PER TILE. TILES WITH INSTALLED WEIGHT LESS THAN 9 POUNDS PER SQUARE FOOT REQUIRE A MINIMUM OF ONE FASTENER PER TILE REGARDLESS OF ROOF SLOPE.

9. R905.5 MINERAL-SURFACED ROLL ROOFING.
1. R905.5.1. MINERAL-SURFACED ROLL ROOFING SHALL BE FASTENED TO SOLIDLY SHEATHED ROOFS.
2. R905.5.2. MINERAL-SURFACED ROLL ROOFING SHALL NOT BE APPLIED ON ROOF SLOPES BELOW ONE UNIT VERTICAL IN 12 UNITS HORIZONTAL (8-PERCENT SLOPE). 3. R905.5.4. MINERAL-SURFACED ROLL ROOFING SHALL CONFORM TO ASTM . D3909 OR ASTM D6380, CLASS M
4. R905.5.5. MINERAL-SURFACED ROLL ROOFING SHALL BE INSTALLED IN ACCORDANCE WITH CODE AND THE MANUFACTURER'S INSTALLATION INSTRUCTIONS.

10. R905.14 SPRAYED POLYURETHANE FOAM ROOFING.
1. R905.14.1. SPRAYED POLYURETHANE FOAM ROOFS SHALL HAVE A DESIGN SLOPE OF A MINIMUM OF ONE-FOURTH UNIT VERTICAL IN 12 UNITS HORIZONTAL (2-PERCENT SLOPE) FOR DRAINAGE.
2. R905.14.2. SPRAY-APPLIED POLYURETHANE-FOAM INSULATION SHALL . COMPLY WITH ASTM C1029, TYPE III OR IV
3. R905.14.3. FOAMED IN PLACE ROOF INSULATION SHALL BE INSTALLED IN ACCORDANCE WITH CODE AND THE MANUFACTURER'S INSTALLATION INSTRUCTIONS. A LIQUID-APPLIED PROTECTIVE COATING THAT COMPLIES WITH TABLE R905.14.3 SHALL BE APPLIED NO LESS THAN 2 HOURS NOR MORE THAN 72 HOURS FOLLOWING THE APPLICATION OF THE FOAM.

FLAT WALL ICF

1. THE REQUIREMENTS AND USES OF FOAM PLASTIC INSULATION SHALL BE GOVERNED BY THE APPLICABLE BUILDING CODE.

2. ICF WALL SYSTEM TO BE BUILDBLOCK INSULATING CONCRETE FORMS (ICFs), CONSISTING OF TWO EXPANDED POLYSTYRENE (EPS) FOAM PLASTIC PANELS SEPARATED BY INJECTION-MOLDED POLYPROPYLENE CROSS-TIES WHICH ARE PARTIALLY EMBEDDED INTO THE EPS PANELS (ICC-ES REPORT ESR-1911); OR HERCUWALL SYSTEM; OR APPROVED EQUAL.

3. THE MANUFACTURER'S PUBLISHED INSTALLATION INSTRUCTIONS AND ICC-ES REPORT ESR-1911 MUST BE STRICTLY ADHERED TO AND A COPY OF THE INSTRUCTIONS AND THE EVALUATION REPORT MUST BE AVAILABLE ON THE JOBSITE AT ALL TIMES DURING INSTALLATION.

EXTERIOR WINDOWS

1. R312.2.1 WINDOW SILLS. IN DWELLING UNITS, WHERE THE OPENING OF AN OPERABLE WINDOW IS LOCATED MORE THAN 72 INCHES ABOVE THE FINISHED GRADE OR SURFACE BELOW, THE LOWEST PART OF THE CLEAR OPENING OF THE WINDOW SHALL BE A MINIMUM OF 24 INCHES ABOVE THE FINISHED FLOOR OF THE ROOM IN WHICH THE WINDOW IS LOCATED. OPERABLE SECTIONS OF WINDOWS SHALL NOT PERMIT OPENINGS THAT ALLOW PASSAGE OF A 4-INCH DIAMETER SPHERE WHERE SUCH OPENINGS ARE LOCATED WITHIN 24 INCHES OF THE FINISHED FLOOR.

EXCEPTIONS:
1. WINDOWS WHOSE OPENINGS WILL NOT ALLOW A 4-INCH-DIAMETER SPHERE TO PASS THROUGH THE OPENING WHEN THE OPENING IS IN ITS LARGEST OPENED POSITION.
2. OPENINGS THAT ARE PROVIDED WITH WINDOW FALL PREVENTION DEVICES THAT COMPLY WITH ASTM F2090.
3. WINDOWS THAT ARE PROVIDED WITH OPENING CONTROL DEVICES THAT COMPLY WITH SECTION R312.2.2.

MECHANICAL
1. R303.9 REQUIRED HEATING. TABLE R301.2(1) IS BELOW 60 DEGREES F, EVERY DWELLING UNIT SHALL BE PROVIDED WITH HEATING FACILITIES CAPABLE OF MAINTAINING A MINIMUM ROOM TEMPERATURE OF 68 DEGREES F AT A POINT 3 FEET ABOVE THE FLOOR AND 2 FEET FROM EXTERIOR WALL IN ALL HABITABLE ROOMS AT THE DESIGN TEMPERATURE. THE INSTALLATION OF ONE OR MORE PORTABLE SPACE HEATERS SHALL NOT BE USED TO ACHIEVE COMPLIANCE WITH THIS SECTION.

2. M1601.1 DUCT DESIGN. DUCT SYSTEMS SERVING HEATING, COOLING AND VENTILATION EQUIPMENT SHALL BE FABRICATED IN ACCORDANCE WITH THE PROVISIONS OF SECTION M1601 AND ACCA MANUAL D OR OTHER APPROVED METHODS. ALL SUPPLY RUNS TO BE LOCATED WITHIN THE INTERIOR WALLS. ALL DUCTS SHALL BE INSULATED PER CODE.

3. M1601.4.1 JOINTS, SEAMS AND CONNECTIONS. ALL JOINTS, LONGITUDINAL AND TRANSVERSE SEAMS, AND CONNECTIONS IN DUCTWORK SHALL BE SECURELY FASTENED AND SEALED WITH WELDS, GASKETS, MASTICS (ADHESIVES), MASTIC-PLUS-EMBEDDED-FABRIC SYSTEMS OR TAPES.

4. SUPPLY REGISTERS TO BE LOCATED PER PLAN AND ARE TO BE CLOSEABLE, CAPABLE OF REGULATING THE C.F.M. AND DIRECTION OF FLOW. RETURN AIR GRILLES TO BE LOCATED PER THE FLOOR AND MECHANICAL PLANS.

5. AIR HANDLING UNITS TO BE LOCATED IN ATTIC SPACE PER PLAN.

6. M1411.3 CONDENSATE DISPOSAL. CONDENSATE FROM ALL COOLING COILS OR EVAPORATORS SHALL BE CONVEYED FROM THE DRAIN PAN OUTLET TO AN APPROVED PLACE OF DISPOSAL. SUCH PIPING SHALL MAINTAIN A MINIMUM HORIZONTAL SLOPE IN THE DIRECTION OF DISCHARGE OF NOT LESS THAN 1/8 UNIT VERTICAL IN 12 UNITS HORIZONTAL (1-PERCENT SLOPE). CONDENSATE SHALL NOT DISCHARGE INTO A STREET, ALLEY OR OTHER AREAS WHERE IT WOULD CAUSE A NUISANCE.

7. M1411.3.1 AUXILIARY AND SECONDARY DRAIN SYSTEMS. IN ADDITION TO THE REQUIREMENTS OF SECTION M1411.3, A SECONDARY DRAIN OR AUXILIARY DRAIN PAN SHALL BE REQUIRED FOR EACH COOLING OR EVAPORATOR COIL WHERE DAMAGE TO ANY BUILDING COMPONENTS WILL OCCUR AS A RESULT OF OVERFLOW FROM THE EQUIPMENT DRAIN PAN OR STOPPAGE IN THE CONDENSATE DRAIN PIPING. SUCH PIPING SHALL MAINTAIN A MINIMUM HORIZONTAL SLOPE IN THE DIRECTION OF DISCHARGE OF NOT LESS THAN 1/8 UNIT VERTICAL IN 12 UNITS HORIZONTAL (1-PERCENT SLOPE). DRAIN PIPING SHALL BE A MINIMUM OF 3/4 INCH NOMINAL PIPE SIZE.

AN AUXILIARY DRAIN PAN WITH A SEPARATE DRAIN SHALL BE INSTALLED UNDER THE COILS ON WHICH CONDENSATION WILL OCCUR. THE AUXILIARY PAN DRAIN SHALL DISCHARGE TO A CONSPICUOUS POINT OF DISPOSAL TO ALERT OCCUPANTS IN THE EVENT OF STOPPAGE OF THE PRIMARY DRAIN. THE PAN SHALL HAVE A MINIMUM DEPTH OF 1.5 INCHES, SHALL NOT BE LESS THAN 3 INCHES LARGER THAN THE UNIT OR COIL DIMENSIONS IN WIDTH AND LENGTH AND SHALL BE CONSTRUCTED OR CORROSION-RESISTANT MATERIAL. GALVANIZED SHEET STEEL PANS SHALL HAVE A MINIMUM THICKNESS OF NOT LESS THAN 0.0236-INCH (NO. 24 GAGE). NONMETALLIC PANS SHALL HAVE A MINIMUM THICKNESS OF NOT LESS THAN 0.0625 INCH.

8. INSTALL ALL EXHAUST FANS PER LOCATION ON ELECTRICAL PLANS.

9. M1305.1.3.1 ELECTRICAL REQUIREMENTS. A LUMINARE CONTROLLED BY A SWITCH LOCATED AT THE REQUIRED PASSAGEWAY OPENING AND A RECEPTACLE OUTLET SHALL BE INSTALLED AT OR NEAR THE APPLIANCE LOCATION IN ACCORDANCE WITH CHAPTER 39.

10. ALL HEATING AND COOLING LOADS TO BE SIZED IN ACCORDANCE WITH THE NATIONAL ENVIRONMENTAL SYSTEMS CONTRACTORS ASSOCIATION MANUAL 'J'. CONSTRUCTION AND INSTALLATION OF DUCTS TO COMPLY WITH ASHRAE STD. 90-75. ALL HEATING AND COOLING EQUIPMENT TO BE A.R.I. CERTIFIED. HEAT PUMPS MUST BE INSTALLED BY A TRADE CONTRACTOR WHO IS CERTIFIED BY THE MANUFACTURER OF THE EQUIPMENT.

11. M1507.2 RECIRCULATION OF AIR. EXHAUST AIR FROM BATHROOMS AND TOILET ROOMS SHALL NOT BE RECIRCULATED WITHIN A RESIDENCE OR TO ANOTHER DWELLING UNIT AND SHALL BE EXHAUSTED DIRECTLY TO THE OUTDOORS. EXHAUST AIR FROM BATHROOMS AND TOILET ROOMS SHALL NOT DISCHARGE INTO AN ATTIC, CRAWL SPACE OR OTHER AREAS INSIDE THE BUILDING.

12. M1507.4 LOCAL EXHAUST RATES. LOCAL EXHAUST SYSTEMS SHALL BE DESIGNED TO HAVE THE CAPACITY TO EXHAUST THE MINIMUM AIR FLOW RATE DETERMINED IN ACCORDANCE WITH TABLE M1507.4: 1. KITCHENS: 100 CFM INTERMITTENT OR 25 CFM CONTINUOUS. 2. BATHROOMS AND TOILET ROOMS: MECHANICAL EXHAUST CAPACITY OF 50 CFM INTERMITTENT OR 20 CFM CONTINUOUS.

PLUMBING

1. PLUMBING FIXTURES SHALL BE AS FOLLOWS: A. WATER CLOSETS - 1.6 GAL. PER FLUSH MAX. B. ALL SHWR HEADS SHALL BE EQUIPPED W/ FLOW CONTROL DEVICES TO LIMIT TOTAL FLOW TO 2.75 G.P.M. MAX. PROVIDE PRESSURE BALANCED VALVES AT SHOWERS AND TUB/SHOWERS. C. LAVATORY SINK FAUCETS - 3 G.P.M. MAX. D. SINK FAUCETS - 2.75 G.P.M. MAX.

2. P2717.1 PROTECTION OF WATER SUPPLY TO DISHWASHERS. THE WATER SUPPLY FOR DISHWASHERS SHALL BE PROTECTED BY AN AIR GAP OR INTEGRAL BACKFLOW PREVENTER.

3. P2801.2 INSTALLATION OF WATER HEATERS. WATER HEATERS SHALL BE CERTIFIED BY THE MANUFACTURER AND INSTALLED IN ACCORDANCE WITH IRC CHAPTERS 20, 24 AND 28. WATER HEATERS SHALL BE 40 GALLON MIN.
3.1 P2803.6.1 REQUIREMENTS FOR DISCHARGE PIPE. WATER HEATER TEMPERATURE AND PRESSURE RELIEF DRAIN SHALL NOT TERMINATE MORE THAN 6" ABOVE THE FLOOR OR WASTE RECEPTOR.

4. P2722.2 HOT WATER. FIXTURE FITTINGS AND FAUCETS THAT ARE SUPPLIED WITH BOTH HOT AND COLD WATER SHALL BE INSTALLED AND ADJUSTED SO THAT THE LEFT-HAND SIDE OF THE WATER TEMPERATURE CONTROL REPRESENTS THE FLOW OF HOT WATER WHEN FACING THE OUTLET. EXCEPTION: SHOWER AND TUB/SHOWER MIXING VALVES CONFORMING TO ASSE 1016 OR ASME A112.18.1/CSA B125.1, WHERE THE WATER TEMPERATURE CONTROL CORRESPONDS TO THE MARKINGS ON THE DEVICE.

5. ALL WATER PIPES TO BE COPPER TYPE "L" UNDER FLOOR W/ NO JOINTS, C.P.V.C. ABOVE SLAB AND TYPE "M" FROM WATER METER TO HOUSE ENTRANCE.

6. ALL EXTERIOR SEWER PIPE SHALL BE SCHEDULE 40 PVC DWV.

7. FIXTURES SHALL BE MARKED AS TO ITS FLOW RATE OR WITH A VERIFIABLE MODEL NO. AT THE TIME OF FINAL INSPECTION.

8. P2705.1 WATER CLOSETS, LAVATORIES AND BIDETS. A WATER CLOSET, LAVATORY OR BIDET SHALL NOT BE SET CLOSER THAN 15 INCHES FROM ITS CENTER TO ANY SIDE WALL, PARTITION OR VANITY OR CLOSER THAN 30 INCHES CENTER-TO-CENTER BETWEEN ADJACENT FIXTURES. THERE SHALL BE AT LEAST A 21-INCH CLEARANCE IN FRONT OF THE WATER CLOSET, LAVATORY OR BIDET TO ANY WALL, FIXTURE OR DOOR.

9. ALL HOSE BIBBS SHALL HAVE A FLANGE FOR ANCHORING TO WALL SURFACE. DO NOT DEPEND ON ANCHORING ON COPPER PIPE.

10. P2708.3 SHOWER CONTROL VALVES. INDIVIDUAL SHOWER AND TUB/SHOWER COMBINATION VALVES SHALL BE EQUIPPED WITH CONTROL VALVES OF THE PRESSURE-BALANCE, THERMOSTATIC-MIXING OR COMBINATION PRESSURE-BALANCE/THERMOSTATIC-MIXING VALVE TYPES WITH A HIGH LIMIT STOP IN ACCORDANCE WITH ASSE 1016 OR ASME A112.18.1/CSA B125.1. THE HIGH LIMIT STOP SHALL BE SET TO LIMIT WATER TEMPERATURE TO A MAXIMUM OF 120 DEGREE F. IN-LINE THERMOSTATIC VALVES SHALL NOT BE USED FOR COMPLIANCE WITH THIS SECTION.

11. PLUMBING MATERIALS AND WORKMANSHIP SHALL BE IN ACCORDANCE WITH INTERNATIONAL RESIDENTIAL CODE (I.R.C.) AND ALL APPLICABLE CITY ORDINANCES.

12. DRAIN, WASTE, AND VENT PIPING SHALL BE PLASTIC ABS, OR PVC SCHEDULE 40 PER SECTION P3002.1.

13. HE PLUMBING ISOMETRIC IS FOR PIPE SIZE AND CLEAN OUT LOCATION ONLY.

14. P2905.2 LEAD CONTENT. PIPE AND FITTINGS USED IN THE WATER-SUPPLY SYSTEM SHALL HAVE A MAXIMUM OF 8 PERCENT LEAD. P2905.14 SOLDERED JOINTS.SOLDERS AND FLUXES USED IN POTABLE WATER-SUPPLY SYSTEMS SHALL HAVE A LEAD CONTENT OF NOT GREATER THAN 0.2 PERCENT. AJ301.1.2. SOLDER HAVING MORE THAN 0.2 PERCENT LEAD IN THE REPAIR OF POTABLE WATER SYSTEMS SHALL NOT BE USED.

15. P2603.5 FREEZING. IN LOCALITIES HAVING A WINTER DESIGN TEMPERATURE OF 32 DEGREES F OR LOWER AS SHOWN IN TABLE R301.2(1) OF THE IRC, A WATER, SOIL OR WASTE PIPE SHALL NOT BE INSTALLED OUTSIDE OF A BUILDING, IN EXTERIOR WALLS, IN ATTICS OR CRAWL SPACES, OR IN ANY OTHER PLACE SUBJECTED TO FREEZING TEMPERATURE UNLESS ADEQUATE PROVISION IS MADE TO PROTECT IT FROM FREEZING BY INSULATION OR HEAT OR BOTH. WATER SERVICE PIPE SHALL BE INSTALLED NOT LESS THAN 12 INCHES DEEP AND NOT LESS THAN 6 INCHES BELOW THE FROST LINE.

16. P2603.3 BREAKAGE AND CORROSION. PIPES PASSING THROUGH CONCRETE OR CINDER WALLS AND FLOORS, COLD-FORMED STEEL FRAMING OR OTHER CORROSIVE MATERIAL SHALL BE PROTECTED AGAINST EXTERNAL CORROSION BY A PROTECTIVE SHEATHING OR WRAPPING OR OTHER MEANS THAT WILL WITHSTAND ANY REACTION FROM LIME AND ACID OF CONCRETE, CINDER OR OTHER CORROSIVE MATERIAL. SHEATHING OR WRAPPING SHALL ALLOW FOR MOVEMENT INCLUDING EXPANSION AND CONTRACTION OF PIPING. MINIMUM WALL THICKNESS OF MATERIAL SHALL BE 0.025 INCH.

SMOKE ALARMS - R314

1. R314 SMOKE ALARMS. SEE ELECTRICAL PLAN(S) AND/OR FLOOR PLAN(S) FOR LOCATION(S) - U.N.O.

2. SMOKE ALARMS SHALL BE INSTALLED IN THE FOLLOWING LOCATIONS:
1. IN EACH SLEEPING ROOM.
2. OUTSIDE EACH SEPARATE SLEEPING AREA IN THE IMMEDIATE VICINITY OF BEDROOMS.
3. ON EACH ADDITIONAL STORY OF THE DWELLING, INCLUDING BASEMENTS AND HABITABLE ATTICS BUT NOT INCLUDING CRAWL SPACES AND UNINHABITABLE ATTICS. IN DWELLINGS OR DWELLING UNITS WITH SPLIT LEVELS AND WITHOUT AN INTERVENING DOOR BETWEEN THE ADJACENT LEVELS, A SMOKE ALARM INSTALLED ON THE UPPER LEVEL SHALL SUFFICE FOR THE ADJACENT LOWER LEVEL PROVIDED THAT THE LOWER LEVEL IS LESS THAN ONE FULL STORY BELOW THE UPPER LEVEL.

3. R314.5. INTERCONNECTION. WHERE MORE THAN ONE SMOKE ALARM IS REQUIRED TO BE INSTALLED WITHIN AN INDIVIDUAL DWELLING UNIT IN ACCORDANCE WITH SECTION R314.3, THE ALARM DEVICES SHALL BE INTERCONNECTED IN SUCH A MANNER THAT THE ACTUATION OF ONE ALARM WILL ACTIVATE ALL OF THE ALARMS IN THE INDIVIDUAL UNIT. PHYSICAL INTERCONNECTION OF SMOKE ALARMS SHALL NOT BE REQUIRED WHERE LISTED WIRELESS ALARMS ARE INSTALLED AND ALL ALARMS SOUND UPON ACTIVATION OF ONE ALARM.

4. R314.1. ALL SMOKE ALARMS SHALL BE LISTED AND LABELED IN ACCORDANCE WITH UL 217 AND INSTALLED IN ACCORDANCE WITH THE PROVISIONS OF THE 2012 I.R.C. AND THE HOUSEHOLD FIRE WARNING EQUIPMENT PROVISIONS OF NFPA 72.

5. R314.3.1 ALTERATIONS, REPAIRS, ADDITIONS. WHEN ALTERATIONS, REPAIRS OR ADDITIONS REQUIRING A PERMIT OCCUR, OR WHEN ONE OR MORE SLEEPING ROOMS ARE ADDED OR CREATED IN EXISTING DWELLINGS, THE INDIVIDUAL DWELLING UNIT SHALL BE PROVIDED WITH SMOKE ALARMS AS REQUIRED FOR NEW DWELLINGS.

EXCEPTIONS:
1. WORK INVOLVING THE EXTERIOR SURFACES OF DWELLINGS, SUCH AS THE REPLACEMENT OF ROOFING OT SIDING, OR THE ADDITION OR REPLACEMENT OF WINDOWS OR DOORS, OR THE ADDITION OF A PORCH OR DECK, ARE EXEMPT FROM THE REQUIREMENTS OF THIS SECTION.
2. 1INSTALLATION, ALTERATION OR REPAIRS OF PLUMBING OR MECHANICAL SYSTEMS ARE EXEMPT FROM THE REQUIREMENTS OF THIS SECTION.

6. R314.4 POWER SOURCE. SMOKE ALARMS SHALL RECEIVE THEIR PRIMARY POWER FROM THE BUILDING WIRING WHEN SUCH WIRING IS SERVED FROM A COMMERCIAL SOURCE, AND WHEN PRIMARY POWER IS INTERRUPTED, SHALL RECEIVE POWER FROM A BATTERY. WIRING SHALL BE PERMANENT AND WITHOUT A DISCONNECTING SWITCH OTHER THAN THOSE REQUIRED FOR OVERCURRENT PROTECTION.

EXCEPTIONS:
1. SMOKE ALARMS SHALL BE PERMITTED TO BE BATTERY OPERATED WHEN INSTALLED IN BUILDINGS WITHOUT COMMERCIAL POWER.
2. HARD-WIRING OF SMOKE ALARMS IN EXISTING AREAS SHALL NOT BE REQUIRED WHERE THE ALTERATIONS OR REPAIRS DO NOT RESULT IN THE REMOVAL OF THE INTERIOR WALL OR CEILING FINISHES EXPOSING THE STRUCTURE, UNLESS THERE IS AN ATTIC, CRAWL SPACE OR BASEMENT AVAILABLE WHICH COULD PROVIDE ACCESS FOR HARD WIRING AND INTERCONNECTION WITHOUT THE REMOVAL OF INTERIOR FINISHES.

7. WHEN THE DWELLING UNIT HAS MORE THAN ON STORY, A DETECTOR SHALL BE INSTALLED ON EACH STORY. WHERE A STORY IS SPLIT INTO TWO OR MORE LEVELS, THE SMOKE DETECTOR SHALL BE INSTALLED ON THE UPPER LEVEL, EXCEPT THAT WHEN A LOWER LEVEL CONTAINS A SLEEPING AREA, A DETECTOR SHALL BE INSTALLED ON EACH LEVEL

8. WHEN SLEEPING ROOMS ARE ON AN UPPER LEVEL, THE DETECTOR MAY BE PLACED ON THE CEILING OF THE UPPER LEVEL IN CLOSE PROXIMITY TO THE STAIRWAY.

9. WHERE THE CEILING HEIGHT OF A ROOM OPEN TO THE HALLWAY SERVING THE BEDROOMS EXCEEDS THAT OF THE HALLWAY BY 24 INCHES OR MORE, SMOKE DETECTORS SHALL BE INSTALLED IN THE HALLWAY AND IN THE ADJACENT ROOM.

10. WHERE THE HIGHEST POINT OF A CEILING IN A ROOM THAT OPENS TO THE HALLWAY SERVING THE BEDROOMS EXCEEDS THAT OF THE OPENING INTO THE HALLWAY BY 24" OR MORE, SMOKE DETECTORS SHALL BE INSTALLED IN THE HALLWAY AND IN THE ADJACENT ROOM. PROVIDE ADDITIONAL SMOKE DETECTORS AS APPLICABLE.

11. DETECTORS SHALL SOUND AN ALARM AUDIBLE IN ALL SLEEPING AREAS OF THE HOME.

12. CARBON MONOXIDE DETECTION SYSTEMS. CARBON MONOXIDE DETECTION SYSTEMS THAT INCLUDE CARBON MONOXIDE DETECTORS AND AUDIBLE NOTIFICATION APPLIANCES, INSTALLED AND MAINTAINED IN ACCORDANCE WITH THIS SECTION FOR CARBON MONOXIDE ALARMS AND NFPA 720, SHALL BE PERMITTED. THE CARBON MONOXIDE DETECTORS SHALL BE LISTED AS COMPLYING WITH UL 2075. WHERE A HOUSEHOLD CARBON MONOXIDE DETECTION SYSTEM IS INSTALLED, IT SHALL BECOME A PERMANENT FIXTURE OF THE OCCUPANCY, AND OWNED BY THE HOMEOWNER.
EXCEPTION: WHERE CARBON MONOXIDE ALARMS ARE INSTALLED MEETING THE REQUIREMENTS OF SECTION R315.1,COMPLIANCE WITH SECTION 315.2 IS NOT REQUIRED.

INTERIOR MATERIAL

1. 1/2" DRYWALL THROUGHOUT (U.N.O.). USE 1/2" SAG RESISTANT GYPSUM BOARD AT CEILING.

2. TABLE R702.3.5, NOTE D. WHEN APPLYING A WATER-BASED TEXTURE MATERIAL AT CEILINGS, THE MINIMUM GYPSUM BOARD THICKNESS SHALL BE INCREASED FROM 3/8" TO 1/2" FOR 16" ON CENTER FRAMING, AND FROM 1/2" TO 5/8" FOR 24" ON CENTER FRAMING, OR 1/2" SAG RESISTANT GYPSUM CEILING BOARD SHALL BE USED.

3. SHOWER OPENING/DOOR SHALL BE SHOWER RODS, TEMPERED GLASS OR APPROVED EQUAL PER SECTION R308.4.5.

4. PROVIDE BACKING FOR CURTAIN RODS AS REQUIRED.

5. GENERAL CONTRACTOR SHALL COORDINATE BACKING FOR ALL ACCESSORIES (TOWEL BARS, T.P. HOLDERS, CLOTHES PEGS, ETC.) IN BATHROOMS, KITCHEN AND OTHER AREAS AS REQUIRED.

6. ALL DOORS TO BE 6'-8" HIGH, 1-3/8" HOLLOW CORE AT INTERIOR, 1-3/4" SOLID CORE AT EXTERIOR, UNLESS NOTED OTHERWISE. SLIDING GLASS DOORS SHALL HAVE TEMPERED GLASS.

7. R311.2 EGRESS DOOR.AT LEAST ONE EGRESS DOOR SHALL BE PROVIDED FOR EACH DWELLING UNIT. THE EGRESS DOOR SHALL BE SIDE-HINGED, AND SHALL PROVIDE A MINIMUM CLEAR WIDTH OF 32 INCHES WHEN MEASURED BETWEEN THE FACE OF THE DOOR AND THE STOP, WITH THE DOOR OPEN 90 DEGREES. THE MINIMUM CLEAR HEIGHT OF THE DOOR OPENING SHALL NOT BE LESS THAN 78 INCHES IN HEIGHT MEASURED FROM THE TOP OF THE THRESHOLD TO THE BOTTOM OF THE STOP. OTHER DOORS SHALL NOT BE REQUIRED TO COMPLY WITH THESE MINIMUM DIMENSIONS. EGRESS DOORS SHALL BE READILY OPENABLE FROM INSIDE THE DWELLING WITHOUT THE USE OF A KEY OR SPECIAL KNOWLEDGE OR EFFORT.

8. CEILINGS AT KITCHEN AND BATHS SHALL BE TAPED, TEXTURED AND PAINTED SEMI-GLOSS. ALL OTHERS SHALL BE TAPED, TEXTURED AND PAINTED FLAT UNLESS NOTED OTHERWISE.

9. ALL INTERIOR DOORS AND TRIM SHALL BE PAINTED GLOSS.

10. INTERIOR COVERINGS OR WALL FINISHES SHALL BE INSTALLED IN ACCORDANCE WITH CHAPTER 7OF THE 2015 I.R.C.

11. R702.3 GYPSUM BOARD.
1. R702.3.1.ALL GYPSUM BOARD MATERIALS AND ACCESSORIES SHALL CONFORM TO ASTM C22, C475, C514, C1002, C1047, C1177, C1178, C1278, C1396 OR C1658 AND SHALL BE INSTALLED IN ACCORDANCE WITH THE PROVISIONS OF SECTION R702.3. ADHESIVES FOR THE INSTALLATION OF GYPSUM BOARD SHALL CONFORM TO ASTM C557.
2. R702.3.2. WOOD FRAMING SUPPORTING GYPSUM BOARD SHALL NOT BE LESS THAN 2 INCHES NOMINAL THICKNESS IN THE LEAST DIMENSION EXCEPT THAT WOOD FURRING STRIPS NOT LESS THAN 1-INCH-BY-2-INCH NOMINAL DIMENSION MAY BE USED OVER SOLID BACKING OR FRAMING SPACED NOT MORE THAN 24 INCHES ON CENTER.
3. R702.3.5. MAXIMUM SPACING OF SUPPORTS AND THE SIZE AND SPACING OF FASTENERS USED TO ATTACH GYPSUM BOARD SHALL COMPLY WITH TABLE R702.3.5. GYPSUM SHEATHING SHALL BE ATTACHED TO EXTERIOR WALLS IN ACCORDANCE WITH TABLE R602.3(1). GYPSUM BOARD SHALL BE APPLIED AT RIGHT ANGLES OR PARALLEL TO FRAMING MEMBERS. ALL EDGES AND ENDS OF GYPSUM BOARD SHALL OCCUR ON THE FRAMING MEMBERS, EXCEPT THOSE EDGES AND ENDS THAT ARE PERPENDICULAR TO THE FRAMING MEMBERS. INTERIOR GYPSUM BOARD SHALL NOT BE INSTALLED WHERE IT IS DIRECTLY EXPOSED TO THE WEATHER OR TO WATER.
4. R702.3.6. SCREWS FOR ATTACHING GYPSUM BOARD TO WOOD FRAMING SHALL BE TYPE W OR TYPE S IN ACCORDANCE WITH ASTM C1002 AND SHALL PENETRATE THE WOOD NOT LESS THAN 5/8 INCH.

12. R702.4 CERAMIC TILE.
1. R702.4.1.CERAMIC TILE SURFACES SHALL BE INSTALLED IN ACCORDANCE WITH ANSI A108.1, A108.4, A108.5, A108.6, A108.11, A118.1, A118.3, A136.1 AND A137.1
2. R702.4.2. FIBER-CEMENT, FIBER-MAT REINFORCED CEMENTITIOUS BACKER UNITS, GLASS MAT GYPSUM BACKERS OR FIBER-REINFORCED GYPSUM BACKERS IN COMPLIANCE WITH ASTM C 1288, C 1325, C 1178 OR C1278, RESPECTIVELY, AND INSTALLED IN ACCORDANCE WITH MANUFACTURERS' RECOMMENDATIONS SHALL BE USED AS BACKERS FOR WALL TILE IN TUB AND SHOWER AREAS AND WALL PANELS IN SHOWER AREAS.

13. R702.3.8 WATER-RESISTANT GYPSUM BACKING BOARD. GYPSUM BOARD UTILIZED AS THE BASE OR BACKER FOR ADHESIVE APPLICATION OF CERAMIC TILE OR OTHER REQUIRED NONABSORBENT FINISH MATERIAL SHALL CONFORM WITH ASTM C1396, C1178 OR C1278. USE OF WATER- RESISTANT GYPSUM BACKING BOARD SHALL BE PERMITTED TO BE USED ON CEILINGS WHERE FRAMING SPACING DOES NOT EXCEED 12 INCHES ON CENTER FOR 1/2-INCH-THICK OR 16 INCHES FOR 5/8 INCH-THICK GYPSUM BOARD. WATER-RESISTANT GYPSUM BOARD SHALL NOT BE INSTALLED OVER A CLASS I OR II VAPOR RETARDER IN A SHOWER OR TUB COMPARTMENT. CUT OR EXPOSED EDGES, INCLUDING THOSE AT WALL INTERSECTIONS, SHALL BE SEALED AS RECOMMENDED BY THE MANUFACTURER. R702.3.8.1 LIMITATIONS. WATER-RESISTANT GYPSUM BACKING BOARD SHALL NOT BE USED THERE WILL BE DIRECT EXPOSURE TO WATER, OR IN AREAS SUBJECT TO CONTINUOUS HIGH HUMIDITY.

STAIRWAYS - R311.7

1. R311.7.1 WIDTH. STAIRWAYS SHALL NOT BE LESS THAN 36 INCHES IN CLEAR WIDTH AT ALL POINTS ABOVE THE PERMITTED HANDRAIL HEIGHT AND BELOW THE REQUIRED HEADROOM HEIGHT. HANDRAILS SHALL NOT PROJECT MORE THAN 4 1/2 INCHES ON EITHER SIDE OF THE STAIRWAY AND THE MINIMUM CLEAR WIDTH OF THE STAIRWAY AT AND BELOW THE HANDRAIL HEIGHT, INCLUDING TREADS AND LANDINGS, SHALL NOT BE LESS THAN 31 1/2 INCHES WHERE A HANDRAIL IS INSTALLED ON ONE SIDE AND 27 INCHES WHERE HANDRAILS ARE PROVIDED ON BOTH SIDES. EXCEPTION: THE WIDTH OF SPIRAL STAIRWAYS SHALL BE IN ACCORDANCE WITH SECTION R311.7.9.1.

2. R311.7.2 HEADROOM. THE MINIMUM HEADROOM IN ALL PARTS OF THE STAIRWAY SHALL NOT BE LESS THAN 6 FEET 8 INCHES MEASURED VERTICALLY FROM THE SLOPED PLANE ADJOINING THE TREAD NOSING OR FROM THE FLOOR SURFACE OF THE LANDING OR PLATFORM ON THAT PORTION OF THE STAIRWAY.

3. R311.7.5.1 RISERS. THE MAXIMUM RISER HEIGHT SHALL BE 7 3/4 INCHES. THE RISER SHALL BE MEASURED VERTICALLY BETWEEN LEADING EDGES OF THE ADJACENT TREADS. THE GREATEST RISER HEIGHT WITHIN ANY FLIGHT OF STAIRS SHALL NOT EXCEED THE SMALLEST BY MORE THAN 3/8 INCH. RISERS SHALL BE VERTICAL OR SLOPED FROM THE UNDERSIDE OF THE NOSING OF THE TREAD ABOVE AT AN ANGLE NOT MORE THAN 30 DEGREES FROM THE VERTICAL. OPEN RISERS ARE PERMITTED PROVIDED THAT THE OPENING BETWEEN TREADS DOES NOT PERMIT THE PASSAGE OF A 4-INCH SPHERE.

EXCEPTION: THE OPENING BETWEEN ADJACENT TREADS IS NOT LIMITED ON STAIRS WITH A TOTAL RISE OF 30 INCHES OR LESS.

4. R311.7.5.2 TREADS. THE MINIMUM TREAD DEPTH SHALL BE 10 INCHES. THE TREAD DEPTH SHALL BE MEASURED HORIZONTALLY BETWEEN THE VERTICAL PLANES OF THE FOREMOST PROJECTION OF ADJACENT TREADS AND AT A RIGHT ANGLE TO THE TREAD'S LEADING EDGE. THE GREATEST TREAD DEPTH WITHIN ANY FLIGHT OF STAIRS SHALL NOT EXCEED THE SMALLEST BY MORE THAN 3/8 INCH. R311.7.5.2.1 WINDER TREADS. WINDER TREADS SHALL HAVE A MINIMUM TREAD DEPTH OF 10 INCHES MEASURED BETWEEN THE VERTICAL PLANES OF THE FOREMOST PROJECTION OF ADJACENT TREADS AT THE INTERSECTION WITH THE WALKLINE. WINDER TREADS SHALL HAVE A MINIMUM TREAD DEPTH OF 6 INCHES AT ANY POINT WITHIN THE CLEAR WIDTH OF THE STAIR. WITHIN ANY FLIGHT OF STAIRS, THE LARGEST WINDER TREAD DEPTH AT THE WALKLINE SHALL NOT EXCEED THE SMALLEST WINDER TREAD BY MORE THAN 3/8 INCH. CONSISTENTLY SHAPED WINDERS AT THE WALKLINE SHALL BE ALLOWED WITHIN THE SAME FLIGHT OF STAIRS AS RECTANGULAR TREADS AND DO NOT HAVE TO BE WITHIN 3/8 INCH OF THE RECTANGULAR TREAD DEPTH.

5. R311.7.5.3 NOSINGS. THE RADIUS OF CURVATURE AT THE NOSING SHALL BE NO GREATER THAN 9/16 INCH. A NOSING NOT LESS THAN 3/4 INCH BUT NOT MORE THAN 1 1/4 INCHES SHALL BE PROVIDED ON STAIRWAYS WITH SOLID RISERS. THE GREATEST NOSING PROJECTION SHALL NOT EXCEED THE SMALLEST NOSING PROJECTION BY MORE THAN 3/8 INCH BETWEEN TWO STORIES, INCLUDING THE NOSING AT THE LEVEL OF FLOORS AND LANDINGS. BEVELING OF NOSINGS SHALL NOT EXCEED 1/2 INCH. EXCEPTION: A NOSING IS NOT REQUIRED WHERE THE TREAD DEPTH IS A MINIMUM OF 11 INCHES.

6. R311.7.6 LANDINGS FOR STAIRWAYS. THERE SHALL BE A FLOOR OR LANDING AT THE TOP AND BOTTOM OF EACH STAIRWAY. THE MINIMUM WIDTH PERPENDICULAR TO THE DIRECTION OF TRAVEL SHALL BE NO LESS THAN THE WIDTH OF THE FLIGHT SERVED. LANDINGS OF SHAPES OTHER THAN SQUARE OR RECTANGULAR SHALL BE PERMITTED PROVIDED THE DEPTH AT THE WALK LINE AND THE TOTAL AREA IS NOT LESS THAN THAT OF A QUARTER CIRCLE WITH A RADIUS EQUAL TO THE REQUIRED LANDING WIDTH. WHERE THE STAIRWAY HAS A STRAIGHT RUN, THE MINIMUM DEPTH IN THE DIRECTION OF TRAVEL SHALL BE NOT LESS THAN 36 INCHES. EXCEPTION: A FLOOR OR LANDING IS NOT REQUIRED AT THE TOP OF AN INTERIOR FLIGHT OF STAIRS, INCLUDING STAIRS IN AN ENCLOSED GARAGE, PROVIDED A DOOR DOES NOT SWING OVER THE STAIRS.

7. R311.7.7 STAIRWAY WALKING SURFACE. THE WALKING SURFACE OF TREADS AND LANDINGS OF STAIRWAYS SHALL BE SLOPED NO STEEPER THAN ONE UNIT VERTICAL IN 48 INCHES HORIZONTAL (2-PERCENT SLOPE).

8. R311.7.8 HANDRAILS. HANDRAILS SHALL BE PROVIDED ON AT LEAST ONE SIDE OF EACH CONTINUOUS RUN OF TREADS OR FLIGHT WITH FOUR OR MORE RISERS.

9. R311.7.8.1 HANDRAIL HEIGHT. HANDRAIL HEIGHT, MEASURED VERTICALLY FROM THE SLOPED PLANE ADJOINING THE TREAD NOSING, OR FINISH SURFACE OF RAMP SLOPE, SHALL BE NOT LESS THAN 34 INCHES AND NOT MORE THAN 38 INCHES.

EXCEPTIONS:
1. THE USE OF A VOLUTE, TURNOUT OR STARTING EASING SHALL BE ALLOWED OVER THE LOWEST TREAD.

2. WHEN HANDRAIL FITTINGS OR BENDINGS ARE USED TO PROVIDE CONTINUOUS TRANSITION BETWEEN FLIGHTS, THE TRANSITION FROM HANDRAIL TO GUARDRAIL, OR USED AT THE START OF A FLIGHT, THE HANDRAIL HEIGHT AT THE FITTINGS OR BENDINGS SHALL BE PERMITTED TO EXCEED THE MAXIMUM HEIGHT.

10. R311.7.8.2 HANDRIAL CONTINUITY. HANDRAILS FOR STAIRWAYS SHALL BE CONTINUOUS FOR THE FULL LENGTH OF THE FLIGHT, FROM A POINT DIRECTLY ABOVE THE TOP RISER OF THE FLIGHT TO A POINT DIRECTLY ABOVE THE LOWEST RISER OF THE FLIGHT. HANDRAIL ENDS SHALL BE RETURNED OR SHALL TERMINATE IN NEWEL POSTS OR SAFETY TERMINALS. HANDRAILS ADJACENT TO A WALL SHALL HAVE A SPACE OF NOT LESS THAN 1 1/ 2INCH BETWEEN THE WALL AND THE HANDRAILS.

EXCEPTIONS:
1. HANDRAILS SHALL BE PERMITTED TO BE INTERRUPTED BY A NEWEL POST AT THE TURN.
2. THE USE OF A VOLUTE, TURNOUT, STARTING EASING OR STARTING NEWEL SHALL BE ALLOWED OVER THE LOWEST TREAD.

11. R311.7.8.3 GRIP-SIZE. ALL REQUIRED HANDRAILS SHALL BE OF ONE OF THE FOLLOWING TYPES OR PROVIDE EQUIVALENT GRASPABILITY:
1. TYPE I. HANDRAILS WITH A CIRCULAR CROSS SECTION SHALL HAVE AN OUTSIDE DIAMETER OF AT LEAST 1 1/4 INCHES AND NOT GREATER THAN 2 INCHES. IF THE HANDRAIL IS NOT CIRCULAR IT SHALL HAVE A PERIMETER DIMENSION OF AT LEAST 4 INCHES AND NOT GREATER THAN 6 1/4 INCHES WITH A MAXIMUM CROSS SECTION OF DIMENSION OF 2 1/4 INCHES. EDGES SHALL HAVE A MINIMUM RADIUS OF 0.01 INCH.
2. TYPE II. HANDRAILS WITH A PERIMETER GREATER THAN 6 1/4 INCHES SHALL PROVIDE A GRASPABLE FINGER RECESS AREA ON BOTH SIDES OF THE PROFILE. THE FINGER RECESS SHALL BEGIN WITHIN A DISTANCE OF 3/4 INCH MEASURED VERTICALLY FROM THE TALLEST PORTION OF THE PROFILE AND ACHIEVE A DEPTH OF AT LEAST 5/16 INCH WITHIN 7/8 INCH BELOW THE WIDEST PORTION OF THE PROFILE. THIS REQUIRED DEPTH SHALL CONTINUE FOR AT LEAST 3/8 INCH TO A LEVEL THAT IS NOT LESS THAN 1 3/4 INCHES BELOW THE TALLEST PORTION OF THE PROFILE. THE MINIMUM WIDTH OF THE HANDRAIL ABOVE THE RECESS SHALL BE 1 1/4 INCHES TO A MAXIMUM OF 2 3/4 INCHES. EDGES SHALL HAVE A MINIMUM RADIUS OF 0.01 INCHES.

12. R311.7.10 SPECIAL STAIRWAYS.SPIRAL STAIRWAYS AND BULKHEAD ENCLOSURE STAIRWAYS SHALL COMPLY WITH ALL REQUIREMENTS OF SECTION R311.7 EXCEPT AS SPECIFIED BELOW:
1. SPIRAL STAIRWAYS ARE PERMITTED, PROVIDED THE MINIMUM CLEAR WIDTH AT AND BELOW THE HANDRAIL SHALL BE 26 INCHES WITH EACH TREAD HAVING A 7 1/2- INCH MINIMUM TREAD DEPTH AT 12 INCHES FROM THE NARROWER EDGE. ALL TREADS SHALL BE IDENTICAL, AND THE RISE SHALL BE NO MORE THAN 9 1/2 INCHES. A MINIMUM HEADROOM OF 6 FEET 6 INCHES SHALL BE PROVIDED.
2. STAIRWAYS SERVING BULKHEAD ENCLOSURES, NOT PART OF THE REQUIRED BUILDING EGRESS, PROVIDING ACCESS FROM THE OUTSIDE GRADE LEVEL TO THE BASEMENT SHALL BE EXEMPT FROM THE REQUIREMENTS OF SECTIONS R311.3 AND R311.7 WHERE THE MAXIMUM HEIGHT FROM THE BASEMENT FINISHED FLOOR LEVEL TO GRADE ADJACENT TO THE STAIRWAY DOES NOT EXCEED 8 FEET AND THE GRADE LEVEL OPENING TO THE STAIRWAY IS COVERED BY A BULKHEAD ENCLOSURE WITH HINGED DOORS OR OTHER APPROVED MEANS.

13. R302.7 UNDER-STAIR PROTECTION. ENCLOSED ACCESSIBLE SPACE UNDER STAIRS SHALL HAVE WALLS, UNDER-STAIR SURFACE AND ANY SOFFITS PROTECTED ON THE ENCLOSED SIDE WITH 1/2-INCH GYPSUM BOARD.

BATH AND SHOWER SPACES

1. MINIMUM SHOWER SIZE IS 30 INCHES BY 30 INCHES PER SECTION P2708.1. THE SHOWER COMPARTMENT ACCESS AND EGRESS OPENING SHALL HAVE A MINIMUM CLEAR AND UNOBSTRUCTED FINISHED WIDTH OF 22 INCHES PER SECTION P2708.1.1.

2. R307.2 BATHUB AND SHOWER SPACES. BATHTUB AND SHOWER FLOORS AND WALLS ABOVE BATHTUBS WITH INSTALLED SHOWER HEADS AND IN SHOWER COMPARTMENTS SHALL BE FINISHED WITH A NONABSORBENT SURFACE. SUCH WALL SURFACES SHALL EXTEND TO A HEIGHT OF NOT LESS THAN 6 FEET ABOVE THE FLOOR.

3. ALL TILED SHOWERS AND TUBS SHALL COMPLY WITH SECTION R702.4.2.

4. ALL FIELD CONSTRUCTED SHOWER PANS SHALL COMPLY WITH SECTION R702.4.2 P2709.1.

FOAM PLASTIC INSULATION - R316

1. THE REQUIREMENTS AND USES OF FOAM PLASTIC INSULATION SHALL BE GOVERNED BY THE APPLICABLE BUILDING CODE.

2. SPRAY-IN FOAM INSULATION TO BE:
1. STANDARD BAYSEAL OC SPRAY-APPLIED CELLULAR POLYURETHANE FOAM PLASTIC INSULATION (ESR-1655)
2. APPROVED ALTERNATE SEALECTION 500 SPRAY-APPLIED FOAM, SEMIRIGID, LOW DENSITY, POLYURETHANE FOAM PLASTIC (ESR-1172).

3. THE MANUFACTURER'S PUBLISHED INSTALLATION INSTRUCTIONS AND ICC-ES REPORT ESR-1655 OR ESR-1172 MUST BE STRICTLY ADHERED TO AND A COPY OF THE INSTRUCTIONS AND THE EVALUATION REPORT MUST BE AVAILABLE ON THE JOBSITE AT ALL TIMES DURING INSTALLATION.

SECURITY DEVICE NOTES

1. SWINGING DOORS:
1. WOOD FLUSH-TYPE DOORS SHALL BE 1-3/4" THICK MIN.
2. WOOD PANEL-TYPE DOOR 1-3/4" THICK MIN. WITH PANELS FABRICATED FROM MATERIALS NOT LESS THAN 3/8" IN THICKNESS; PROVIDED ALL SHAPED PORTIONS OF THE PANELS ARE NOT LESS THAN 1/4" THICK.
3. FERROUS METAL DOORS OF SOLID OR HOLLOW CORE CONSTRUCTION SHALL HAVE SURFACES NOT LESS THAN 24 GAUGE IN THICKNESS.
4. METAL DOORS SHALL HAVE SURFACES NOT LESS THAN THE EQUIVALENT OF 16 GAUGE SHEET METAL (0.006") IN THICKNESS.

2. HINGES: ALL EXTERIOR DOOR HINGES SHALL BE MOUNTED WITH THE HINGES ON THE INSIDE OF THE BUILDING OR SHALL HAVE ONE OF THE FOLLOWING:
1. NON-REMOVAL HINGE PINS.
2. HINGES SHAPED TO PREVENT REMOVAL OF THE DOOR OR; C. TOP AND BOTTOM HINGES SHALL HAVE 1/4" STEEL JAMB STUDS WHICH PROJECT A MINIMUM OF 1/4".

3. DEADBOLTS: DEADBOLT LOCKS ARE REQUIRED ON ALL EXTERIOR SWINGING DOORS AND MUST BE EQUIPPED WITH THE FOLLOWING:
1. DEADBOLT LOCKS MUST HAVE A WRENCH RESISTANT AND CASE HARDENED COLLAR, CASE HARDENED FASTENERS WHICH THREAD INTO THE CYLINDER BODY, AND A FOUR (4) SCREW STRIKE PLATE USING 3-INCH BY NO. 8 SCREWS (NO. 8 MACHINE SCREWS IN METAL JAMBS). SUCH LOCKS MUST BE OPERABLE FROM THE INSIDE WITHOUT THE USE OF A KEY.
2. DEADBOLT LOCKS SHALL BE EQUIPPED WITH A MINIMUM 1 INCH THROW BOLT AND PROVIDE AN EMBEDMENT OF NOT LESS THAN 5/8".
3. A HOOK-SHAPED OR AN EXPANDING - LUG DEADBOLT SHALL HAVE A MINIMUM THROW OF 3/4".

4. EXTERIOR SWINGING DOORS MUST BE SOLID CORE OR METAL SKIN CONSTRUCTION WITH SOLID JAMBS FOR 6 INCHES ABOVE AND BELOW THE LOCK STRIKE PLATE. IF HINGES ARE ON THE OUTSIDE, THEY MUST HAVE NON-REMOVABLE PINS OR BE PIN THE RAISING AND REMOVING OF THE MOVING PANEL FROM THE TRACK WHILE IN THE STANDARD HINGES. ALL MAIN OR FRONT ENTRY DOORS MUST HAVE A 180 DEGREE DOOR VIEWER OR BE ARRANGED SO THAT THE OCCUPANT CAN VIEW THE IMMEDIATE AREA OUTSIDE THE DOOR THROUGH A WINDOW. DOORS FROM A DWELLING UNIT TO AN ATTACHED GARAGE ALSO ARE CONSIDERED EXTERIOR SWINGING DOORS.

5. EXTERIOR SLIDING DOORS AND WINDOWS SHALL BE PROVIDED WITH A LOCKING DEVICE AND SHALL BE CONSTRUCTED AND INSTALLED OR EQUIPPED WITH A DEVICE SO AS TO PROHIBIT THE RAISING AND REMOVING OF THE MOVING PANEL FROM THE TRACK WHILE IN THE CLOSED AND LOCKED POSITION. AN AUXILIARY NON-KEY LOCK ALSO MUST BE INSTALLED. THE STATIONARY SECTION SHALL NOT BE REMOVABLE FROM THE OUTSIDE.

6. EXTERIOR WINDOWS SHALL BE CONSTRUCTED AND INSTALLED SO AS TO PROHIBIT SLIDING, RAISING OR REMOVAL OF THE MOVING SECTION WHILE IN THE CLOSED AND LOCKED POSITION. WINDOW PANELS SHALL HAVE WEATHER STRIP MOLDING OR GLAZING BEAD, WHICH IS NOT EASILY REMOVED FROM THE OUTSIDE. ADJUSTABLE CLAMP LOCKS SHALL BE INSTALLED ON ALL WINDOW TRACKS TO PREVENT SLIDING. SLEEPING- ROOM WINDOWS MAY NOT HAVE LOCKS THAT REQUIRE A KEY OR SPECIAL KNOWLEDGE OR EFFORT TO UNLOCK.

7. UPWARD ACTING DOORS AND SLIDING DOORS OTHER THAN GLASS SHALL BE SECURED W/ A CYLINDER LOCK, AND EITHER A PADLOCK W/ A HARDENED STEEL SHACKLE AND HARDENED STEEL HASP, METAL SLIDE BAR, BOLT OR EQUIVALENT DEVICE, UNLESS SECURED BY ELECTRIC POWER OPERATION. 8. GARAGE DOORS SHALL BE EQUIPPED WITH AT LEAST TWO LOCKING

8. DEVICES OF THE FOLLOWING TYPES: THROW BOLT OR FLUSH BOLT, CYLINDER-TYPE LOCK, PADLOCK AND HASP OR ELECTRIC DOOR OPERATOR WITH AN AUTOMATIC LOCKING DEVICE, ALL LOCATED ON THE INSIDE OF GARAGE, AND SHALL BE CAPABLE OF BEING OPENED AT ALL TIMES FROM THE INSIDE OF THE GARAGE WITHOUT THE USE OF A KEY OR ELECTRICAL POWER.

9. ALL EXITS TO BE OPENABLE FROM THE INSIDE WITHOUT USE OF A KEY OR SPECIAL KNOWLEDGE. MANUALLY OPERATED EDGE OR SURFACE MOUNTED FLUSH BOLTS AND SURFACE BOLTS ARE PROHIBITED AT A DOOR OR THE ACTIVE LEAF OF A PAIR OF DOORS.

10. SECURITY DOORS ARE ALL EXTERIOR DOORS LEADING INTO RESIDENCE, INCLUDING GLASS DOORS, GARAGE DOORS, DOORS FROM GARAGE INTO RESIDENCE AND SWINGING DOORS.

11. ALL EXTERIOR WOOD DOORS AND DOORS FROM THE GARAGE INTO THE DWELLING SHALL BE SOLID CORE - 1-3/4" THICK WITH MINIMUM 4-5/8" STYLE WIDTH.

12. DOORS LEADING INTO THE HOUSE FROM THE GARAGE SHALL BE SELF-CLOSING AND TIGHT-FITTING W/ GASKETS AND SWEEP.

13. THE INACTIVE LEAF OF A PAIR OF DOORS SHALL BE EQUIPPED WITH CANE BOLTS, EDGE OF SURFACE MOUNTED FLUSH BOLTS TOP AND BOTTOM, WITH 1/2" MINIMUM PROTECTION TO HOLD FIRM THIS PART OF THE DOOR.

14. THE ACTIVE LEAF OF A PAIR OF DOORS SHALL BE EQUIPPED WITH A DEADBOLT AND THE LOCK SHALL BE KEY OPERATED FROM THE EXTERIOR. LOCKS SHALL ENGAGE AND DISENGAGE FROM THE INTERIOR OF THE DOOR BY A DEVICE NOT REQUIRING A KEY OR SPECIAL KNOWLEDGE OR EFFORT.

15. WINDOW OPENINGS ARE PROHIBITED WITHIN 40" OF THE LOCKING DEVICE OF A DOOR IN THE CLOSED POSITION, WHEN THE DOOR IS OPENABLE FROM THE INSIDE WITHOUT THE USE OF A KEY. 40" SEPARATION IS NOT REQUIRED IF IMPACT RESISTANT GLAZING IS USED.

16. NO DOUBLE KEYED LOCKS SHALL BE ALLOWED.

17. CYLINDER LOCK GUARDS SHALL BE CONSTRUCTED OF A SOLID METAL, NOT A HOLLOW SHELL.

18. CYLINDER LOCK GUARDS SHALL BE INSTALLED ON ALL CYLINDER LOCKS WHENEVER THE CYLINDER PROJECTS BEYOND THE FACE OF THE DOOR OR IS OTHERWISE ACCESSIBLE TO GRIPPING TOOLS.

19. ATTIC ACCESS DOORS SHOULD BE LOCATED IN THE INTERIOR OF THE DWELLING OR GARAGE. IF NO INTERIOR LOCATION AVAILABLE, A HARDENED STEEL HASP AND PADLOCK MUST BE INSTALLED OVER THE ATTIC ACCESS DOORS.

20. SECURITY SYSTEM (IF APPLICABLE) SHALL BE INSTALLED PRIOR TO PLASTERING SO SENSORS AND OTHER EQUIPMENT CAN BE PLASTERED INTO PLACE (NOT SURFACE MOUNTED AND CONSPICUOUS).

SOUND ATTENUATION

R VALUE - 2x4 FRAMED WALL
A COURT DECISION OF DOW CORNING VS. DOE IN 1991 DECIDED THAT THE RATED R VALUE OF A WALL IS THE SUM OF THE R VALUES OF THE MATERIALS IN THE CAVITY BETWEEN THE FRAMING STUDS. THE R VALUE FOR A 2x4 WALL MAY BE CALCULATED AS FOLLOWS, USING VALUES FROM ASHRAE FUNDAMENTALS, 1981 & 1997, AND MANUFACTURER'S RATINGS:

WALL COMPONENT	R VALUE
INSIDE AIR FILM	0.68
GYPSUM OR PLASTER BOARD, 1/2" THICK	0.45
INSULATION BATT, RATED BY MANUFACTURER AS R13	13.00
EXPANDED POLYSTYRENE, MOLDED BREAD BOARD, DENSITY 1.5 lb/ft, 1" THICK (LESS DENSE BOARD HAS LESS R VALUE, MORE DENSE HAS HIGHER R VALUE)	4.17
STUCCO, 80 lbs/ft @ 0.22 R/ inch, 3/4" THICKNESS (LIGHTER WEIGHT STUCCO HAS HIGHER R VALUE, HEAVIER WEIGHT HAS LESS R VALUE)	0.17
OUTSIDE AIR FILM, 15 mph WIND SPEED	0.17
TOTAL	18.64

USING CONVENTIONAL ROUNDING TECHNIQUES, THIS WALL IS DESIGNATED AS R-19
1. A JURISDICTION THAT HAS TERRITORY IN THE VICINITY OF A MILITARY AIRPORT REQUIRES ALL RESIDENTIAL BUILDINGS SHALL EITHER BE CONSTRUCTED WITH A MINIMUM OF R-18 EXTERIOR WALL ASSEMBLY, A MINIMUM OF R-30 ROOF ASSEMBLY, DUAL GLAZED WINDOWS AND SOLID WOOD, FOAM-FILLED FIBERGLASS OR METAL DOORS TO THE EXTERIOR OR CERTIFIED BY A STATE OF ARIZONA ARCHITECT OR ENGINEER TO ACHIEVE A MAXIMUM INTERIOR NOISE LEVEL OF FORTY-FIVE (45) DECIBELS AT TIME OF FINAL CONSTRUCTION.
2. WITHIN FLY ZONE AREA O AIRPORTS, MILITARY INSTALLATIONS, AND DIRECTLY ADJACENT TO FREEWAYS, BUILDING COMPONENTS SHALL BE DESIGNED FOR SOUND ATTENUATION.

ELECTRICAL
1. PROVIDE 200 AMP ELECTRICAL SERVICE, UNLESS NOTED OTHERWISE.

2. PROVIDE 20-FOOT LONG BARE COPPER WIRE NOT SMALLER THAN 4 AWG AT FOOTING FOR UFER, OR AS AN ALTERNATE, PROVIDE 20-FOOT LONG #4 REBAR WITH A 90 DEGREE BEND AT FOOTING WITH THE #4 COPPER WIRE BEING ATTACHED WITH AN APPROVED CLAMP IN ACCORDANCE WITH SECTION E3608. COORDINATE ALL GROUND UFER LOCATIONS WITH SERVICE ENTRANCE LOCATION PRIOR TO THE START OF CONSTRUCTION.

3. PROVIDE GROUND-FAULT CIRCUIT INTERRUPTER PROTECTION FOR ALL RECEPTACLES IN BATHROOMS, IN GARAGES AND ACCESSORY BUILDINGS, OUTDOORS, IN CRAWL SPACES, IN UNFINISHED BASEMENTS, AT KITCHEN COUNTERTOP SURFACES, AND LOCATED WITHIN 6 FEET OF THE OUTSIDE EDGE OF SINKS LOCATED IN AN AREA OTHER THAN THE KITCHEN IN ACCORDANCE WITH SECTION E3902.

INSULATION AND FENESTRATION REQUIREMENTS BY COMPONENT [a] TABLE N1102.1.1 (NOT APPLICABLE IF PERFORMANCE METHOD APPLIED)

CLIMATE ZONE	FENESTRATION U-FACTOR [b]	SKYLIGHT U-FACTOR [b]	GLAZED FENESTRATION SHGC [b,e]	CEILING R-VALUE	WOOD FRAMED WALL R-VALUE	MASS WALL R-VALUE [i]	FLOOR R-VALUE	BASEMENT WALL R-VALUE [c]	SLAB R-VALUE AND DEPTH [d]	CRAWL SPACE WALL R-VALUE [c]
1	NR	0.75	0.25	30	13	3/4	13	0	0	0
2	0.40	0.65	0.25	38	13	4/6	13	0	0	0
3	0.35	0.55	0.25	38	20 OR 13+5 [h]	8/13	19	5/13 [f]	0	5/13
4 EXCEPT MARINE	0.35	0.55	0.40	49	20 OR 13+5 [h]	8/13	19	10/13	10, 2 FT	10/13
5 AND MARINE 4	0.32	0.55	NR	49	20 OR 13+5 [h]	13/17	30 [g]	15/19	10, 2 FT	15/19
6	0.32	0.55	NR	49	20+5 OR 13+10 [h]	15/20	30 [g]	15/19	10, 4 FT	15/19
7 AND 8	0.32	0.55	NR	49	20+5 OR 13+10 [h]	19/21	38 [g]	15/19	10, 4 FT	15/19

a. R-VALUES ARE MINIMUMS. U-FACTORS AND SHGC ARE MAXIMUMS. WHEN INSULATION IS INSTALLED IN A CAVITY WHICH IS LESS THAN THE LABEL OR DESIGN THICKNESS OF THE INSULATION, THE INSTALLED R-VALUE OF THE INSULATION SHALL NOT BE LESS THAN THE R-VALUE SPECIFIED IN THE TABLE.
b. THE FENESTRATION U-FACTOR COLUMN EXCLUDES SKYLIGHTS. THE SHGC COLUMN APPLIES TO ALL GLAZED FENESTRATION. EXCEPTION: SKYLIGHTS MAY BE EXCLUDED FROM GLAZED FENESTRATION SHGC REQUIREMENTS IN CLIMATE ZONES 1 THROUGH 3 WHERE THE SHGC FOR SUCH SKYLIGHTS DOES NOT EXCEED 0.30.
c. "15/19" MEANS R-15 CONTINUOUS INSULATION ON THE INTERIOR OR EXTERIOR OF THE HOME OR R-19 CAVITY INSULATION AT THE INTERIOR OF THE BASEMENT WALL. "15/19" SHALL BE PERMITTED TO BE MET WITH R-13 CAVITY INSULATION ON THE INTERIOR OF THE BASEMENT WALL PLUS R-5 CONTINUOUS INSULATION ON THE INTERIOR OR EXTERIOR OF THE HOME. "10/13" MEANS R-10 CONTINUOUS INSULATION ON THE INTERIOR OR EXTERIOR OF THE HOME OR R-13 CAVITY INSULATION AT THE INTERIOR OF THE BASEMENT WALL.
d. R-5 SHALL BE ADDED TO THE REQUIRED SLAB EDGE R-VALUES FOR HEATED SLABS. INSULATION DEPTH SHALL BE THE DEPTH OF THE FOOTING OR 2 FEET, WHICHEVER IS LESS IN ZONES 1 THROUGH 3 FOR HEATED SLABS.
e. THERE ARE NO SHGC REQUIREMENTS IN THE MARINE ZONE.
f. BASEMENT WALL INSULATION IS NOT REQUIRED IN WARM-HUMID LOCATIONS AS DEFINED BY FIGURE N1101.10 AND TABLE N1101.10.
g. OR INSULATION SUFFICIENT TO FILL FRAMING CAVITY, R-19 MINIMUM.
h. FIRST VALUE IS CAVITY INSULATION, SECOND IS CONTINUOUS INSULATION OR INSULATED SIDING, SO "13+5" MEANS R-13 CAVITY INSULATION PLUS R-5 CONTINUOUS INSULATION OR INSULATED SIDING. IF STRUCTURAL SHEATHING COVERS 40 PERCENT OR LESS OF THE EXTERIOR, CONTINUOUS INSULATION R-VALUE SHALL BE PERMITTED TO BE REDUCED BY NO MORE THAN R-3 IN THE LOCATIONS WHERE STRUCTURAL SHEATHING IS USED - TO MAINTAIN A CONSISTENT TOTAL SHEATHING THICKNESS.
i. THE SECOND R-VALUE APPLIES WHEN MORE THAN HALF THE INSULATION IS ON THE INTERIOR OF THE MASS WALL.

brianscottdesign
4127 E. Mesquite St.
Gilbert, AZ 85296
602-999-1690
bromney@brianscottdesign.com

KASNOFF RESIDENCE

15546 E. TELEGRAPH DR.
FOUNTAIN HILLS, AZ.
85268

TITLE: GENERAL ARCHITECTURAL NOTES
KASNOFF RESIDENCE

DATE: 8/06/21

1
2
3

APPROVED
07/11/2022
TOWN OF FOUNTAIN HILLS INC. 1989 All that is Arizona

SHEET NUMBER

C1.3

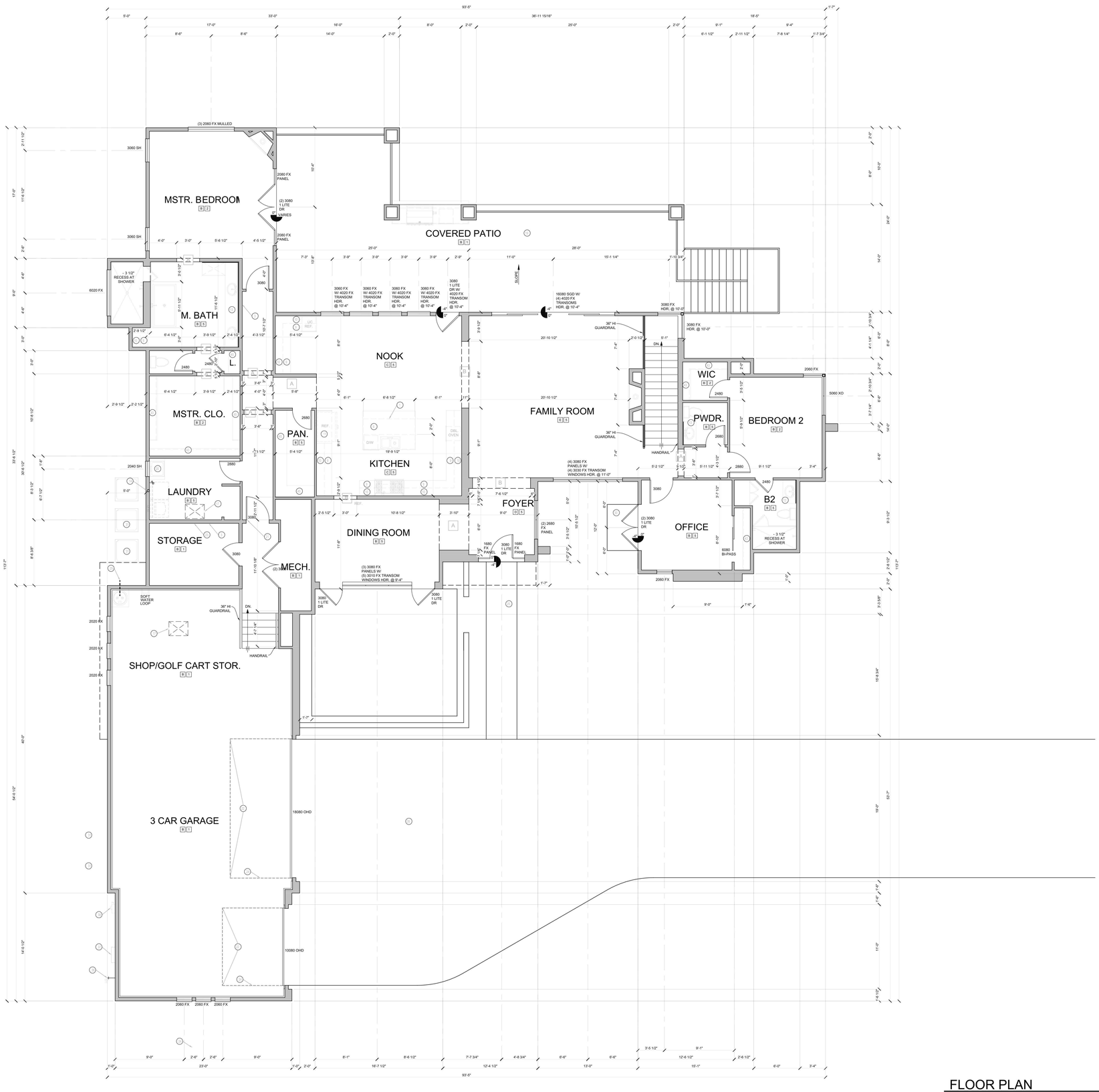

FLOOR PLAN

3/16" = 1'-0"

HEIGHT SCHEDULE

A	9'-1"	C	11'-1"	E	14'-1"	G	-
B	10'-1"	D	12'-1"	F	-	H	-

FLOOR MATERIAL

1	CONCRETE	3	VINYL	5	HARD SURFACE
2	CARPET AND PAD	4	CERAMIC TILE	6	PAVERS

KEY NOTE

1. 34 1/2" 2X6 RGH HT. LOW WALL WITH DOUBLE TOP PLATE
2. DRYWALL WRAPPED LOW WALL
3. 2X6 WALL
4. FRAMED STUCCO COLUMN
5. EXPOSED WOOD POST
6. LOW WALL - SEE PLAN FOR HEIGHT
7. NICHE - SEE PLAN FOR SIZE AND HEIGHT
8. LINE OF CEILING CHANGE
9. BASE CABINET
10. UPPER CABINET
11. FULL DEPTH UPPER CABINETS
12. STANDARD SHELF AT 5'-6" OR UPPER CABINETS
13. VANITY BASE CABINET
14. 4" DIA. VENT TO OUTSIDE TO BE INSTALLED NOT TO EXCEED 35' WITH REDUCTIONS FOR BENDS
15. LINE OF FLOOR MATERIAL CHANGE
16. IN-SLAB CONDUIT
17. ATTIC ACCESS
18. MEDICINE CABINET
19. 1/2" EXT. M.R. GYP. AT CLG.
20. LAUNDRY SINK
21. 1 3/8" MIN. THICKNESS SOLID CORE, SELF CLOSING AND SELF LATCHING DOOR TO BE TIGHT FITTING WITH GASKETS AND SWEEP
22. PROVIDE 2X CEILING BACKING AT GARAGE DOOR TRACKS - TYP. AT EACH SIDE
23. THE GARAGE SHALL BE SEPARATED FROM THE RESIDENCE AND IT'S ATTIC AREA BY NOT LESS THAN 1/2" GYP. BOARD APPLIED TO THE GARAGE SIDE. GARAGES BENEATH HABITABLE ROOMS SHALL BE SEPARATED FROM ALL HABITABLE ROOMS ABOVE BY NOT LESS THAN 5/8" TYPE X GYP. BOARD OR EQUIVALENT.
24. LINE OF O.H.D.
25. CONCRETE/PAVER WALKWAY
26. CONCRETE/PAVER DRIVEWAY
27. FENCE RETURNS
28. W.I. GATES WITH CEDAR SLATS
29. T & P LINE TO OUTSIDE TERMINATE NOT MORE THAN 6" ABOVE THE GROUND
30. CONCRETE STOOP
31. A/C CONDENSER AND PAD
32. LINE OF STONE OR BRICK VENEER
33. LINE OF STUCCO OVER FOAM POP-OUT
34. GAS STUB
35. HOSE BIBB
36. HOSE BIBB WITH MAIN SHUT OFF VALVE AND LANDSCAPE TEE
37. LOCATION OF ELECTRICAL METER
38. LOCATION OF GAS METER PROVIDE GAS SHUT OFF VALVE TO DOWNWARD SIDE OF METER TO HOUSE
39. (2) 14"X8" SCREENED METAL LOUVER COMB. AIR VENTS (1) 12" MAX. ABOVE FLR. AND (1) 12" MAX. BELOW CEILING
40. HOSE BIBB WITH MAIN SHUT OFF VALVE AND LANDSCAPE TEE
41. HOSE BIBB WITH MAIN SHUT OFF VALVE AND LANDSCAPE TEE
42. 1 ROD AND 1 SHELF
43. 2 RODS AND 2 SHELVES
44. (4) EQUALLY SPACED SHELVES
45. (5) EQUALLY SPACED SHELVES
46. (6) EQUALLY SPACED SHELVES

GENERAL NOTES

1. SEE FLOOR PLAN FOR WALL VARIATIONS AND SIZES
2. ALL WINDOWS HEADERS TO BE 8'-0" U.N.O.
3. PROVIDE WINDOW AREAS EQUAL TO 8% OF FLOOR AREA AND A MINIMUM OPENABLE AREA TO OUTDOORS EQUAL TO 4% OF FLOOR AREA
4. MANUFACTURERS INSTALLATION INSTRUCTIONS AND COPY OF APPLICABLE I.C.C. RESEARCH REPORT WILL BE MADE AVAILABLE TO THE INSPECTOR ON A 0" CLEARANCE FIREPLACE INSTALLATION
5. FIRE/DRAFTSTOP BLOCK ALL VOID SPACES

brianscottdesign

4127 E. Mesquite St.
Gilbert, AZ 85296
602-999-1690

bromney@brianscottdesign.com

KASNOFF RESIDENCE

15546 E. TELEGRAPH DR.
FOUNTAIN HILLS, AZ.
85268

TITLE:
FLOOR PLAN
KASNOFF RESIDENCE

DATE: 8/06/21

APPROVED
07/11/2022

SHEET NUMBER

A1.1

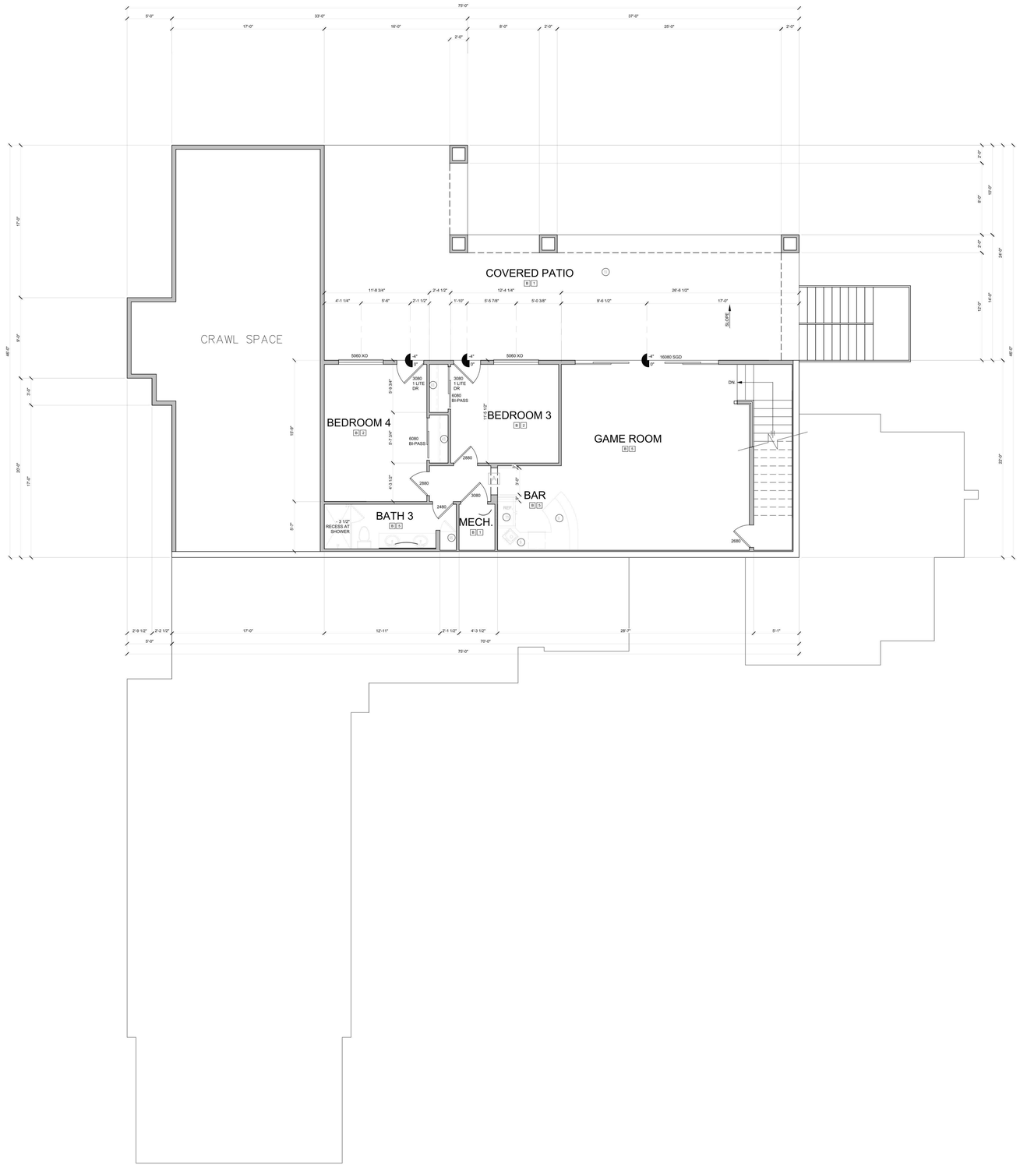

HEIGHT SCHEDULE

A	9'-1"	C	11'-1"	E	14'-1"	G	-
B	10'-1"	D	12'-1"	F	-	H	-

FLOOR MATERIAL

1	CONCRETE	3	VINYL	5	HARD SURFACE
2	CARPET AND PAD	4	CERAMIC TILE	6	PAVERS

KEY NOTE

1. 34 1/2" 2X6 RGH HT. LOW WALL WITH DOUBLE TOP PLATE
2. DRYWALL WRAPPED LOW WALL
3. 2X6 WALL
4. FRAMED STUCCO COLUMN
5. EXPOSED WOOD POST
6. LOW WALL - SEE PLAN FOR HEIGHT
7. NICHE - SEE PLAN FOR SIZE AND HEIGHT
8. LINE OF CEILING CHANGE
9. BASE CABINET
10. UPPER CABINET
11. FULL DEPTH UPPER CABINETS
12. STANDARD SHELF AT 5'-6" OR UPPER CABINETS
13. VANITY BASE CABINET
14. 4" DIA. VENT TO OUTSIDE TO BE INSTALLED NOT TO EXCEED 35' WITH REDUCTIONS FOR BENDS
15. LINE OF FLOOR MATERIAL CHANGE
16. IN-SLAB CONDUIT
17. ATTIC ACCESS
18. MEDICINE CABINET
19. 1/2" EXT. M.R. GYP. AT CLG.
20. LAUNDRY SINK
21. 1 3/8" MIN. THICKNESS SOLID CORE, SELF CLOSING AND SELF LATCHING DOOR TO BE TIGHT FITTING WITH GASKETS AND SWEEP
22. PROVIDE 2X CEILING BACKING AT GARAGE DOOR TRACKS - TYP. AT EACH SIDE
23. THE GARAGE SHALL BE SEPARATED FROM THE RESIDENCE AND IT'S ATTIC AREA BY NOT LESS THAN 1/2" GYP. BOARD APPLIED TO THE GARAGE SIDE. GARAGES BENEATH HABITABLE ROOMS SHALL BE SEPARATED FROM ALL HABITABLE ROOMS ABOVE BY NOT LESS THAN 5/8" TYPE X GYP. BOARD OR EQUIVALENT.
24. LINE OF O.H.D.
25. CONCRETE/PAVER WALKWAY
26. CONCRETE/PAVER DRIVEWAY
27. FENCE RETURNS
28. W.I. GATES WITH CEDAR SLATS
29. T & P LINE TO OUTSIDE TERMINATE NOT MORE THAN 6" ABOVE THE GROUND
30. CONCRETE STOOP
31. A/C CONDENSER AND PAD
32. LINE OF STONE OR BRICK VENEER
33. LINE OF STUCCO OVER FOAM POP-OUT
34. GAS STUB
35. HOSE BIBB
36. HOSE BIBB WITH MAIN SHUT OFF VALVE AND LANDSCAPE TEE
37. LOCATION OF ELECTRICAL METER
38. LOCATION OF GAS METER PROVIDE GAS SHUT OFF VALVE TO DOWNWARD SIDE OF METER TO HOUSE
39. (2) 14"X8" SCREENED METAL LOUVER COMB. AIR VENTS (1) 12" MAX. ABOVE FLR. AND (1) 12" MAX. BELOW CEILING
40. HOSE BIBB WITH MAIN SHUT OFF VALVE AND LANDSCAPE TEE
41. HOSE BIBB WITH MAIN SHUT OFF VALVE AND LANDSCAPE TEE
42. 1 ROD AND 1 SHELF
43. 2 RODS AND 2 SHELVES
44. (4) EQUALLY SPACED SHELVES
45. (5) EQUALLY SPACED SHELVES
46. (6) EQUALLY SPACED SHELVES

GENERAL NOTES

1. SEE FLOOR PLAN FOR WALL VARIATIONS AND SIZES
2. ALL WINDOWS HEADERS TO BE 8'-0" U.N.O.
3. PROVIDE WINDOW AREAS EQUAL TO 8% OF FLOOR AREA AND A MINIMUM OPENABLE AREA TO OUTDOORS EQUAL TO 4% OF FLOOR AREA
4. MANUFACTURERS INSTALLATION INSTRUCTIONS AND COPY OF APPLICABLE I.C.C. RESEARCH REPORT WILL BE MADE AVAILABLE TO THE INSPECTOR ON A 0" CLEARANCE FIREPLACE INSTALLATION
5. FIRE/DRAFTSTOP BLOCK ALL VOID SPACES

REAR ELEVATION

3/16" = 1'-0"

brianscottdesign
4127 E. Mesquite St.
Gilbert, AZ 85296
602-999-1690
bromney@brianscottdesign.com

KASNOFF RESIDENCE

15546 E. TELEGRAPH DR.
FOUNTAIN HILLS, AZ.
85268

TITLE: BASEMENT FLOOR PLAN
KASNOFF RESIDENCE

DATE: 8/06/21

APPROVED
07/11/2022

SHEET NUMBER

A1.2

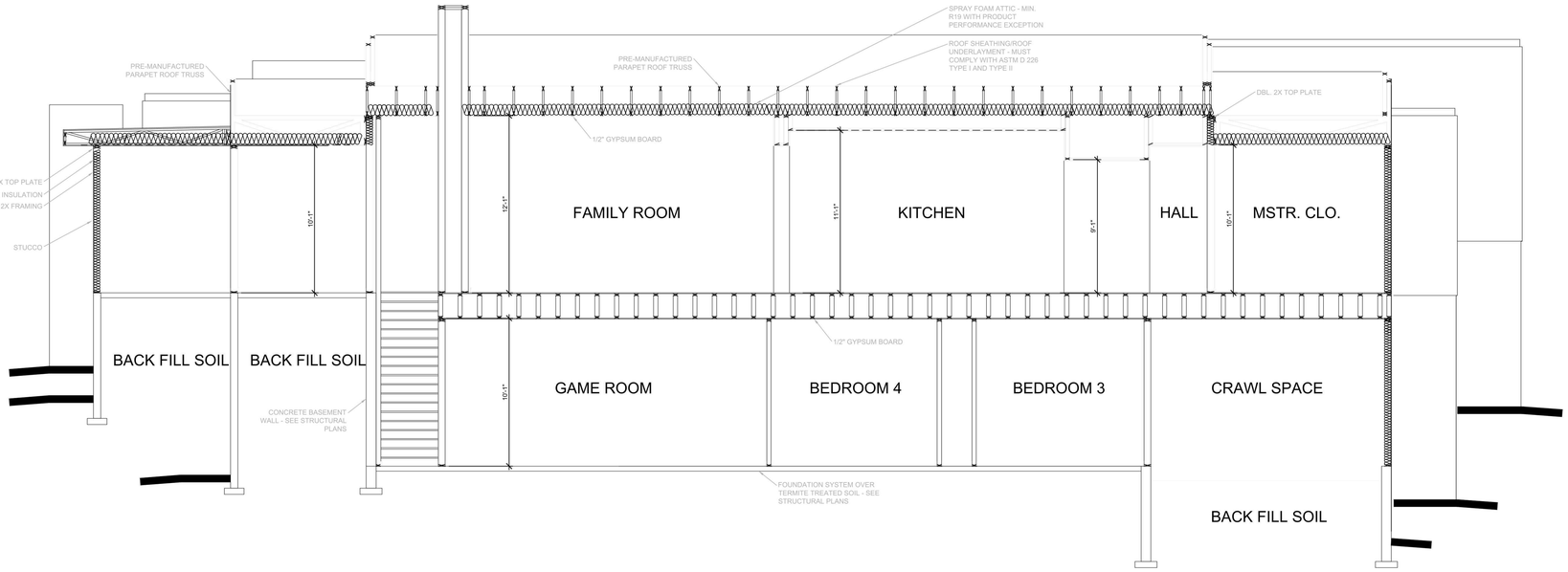

SECTION A-A

1/4" = 1'-0"

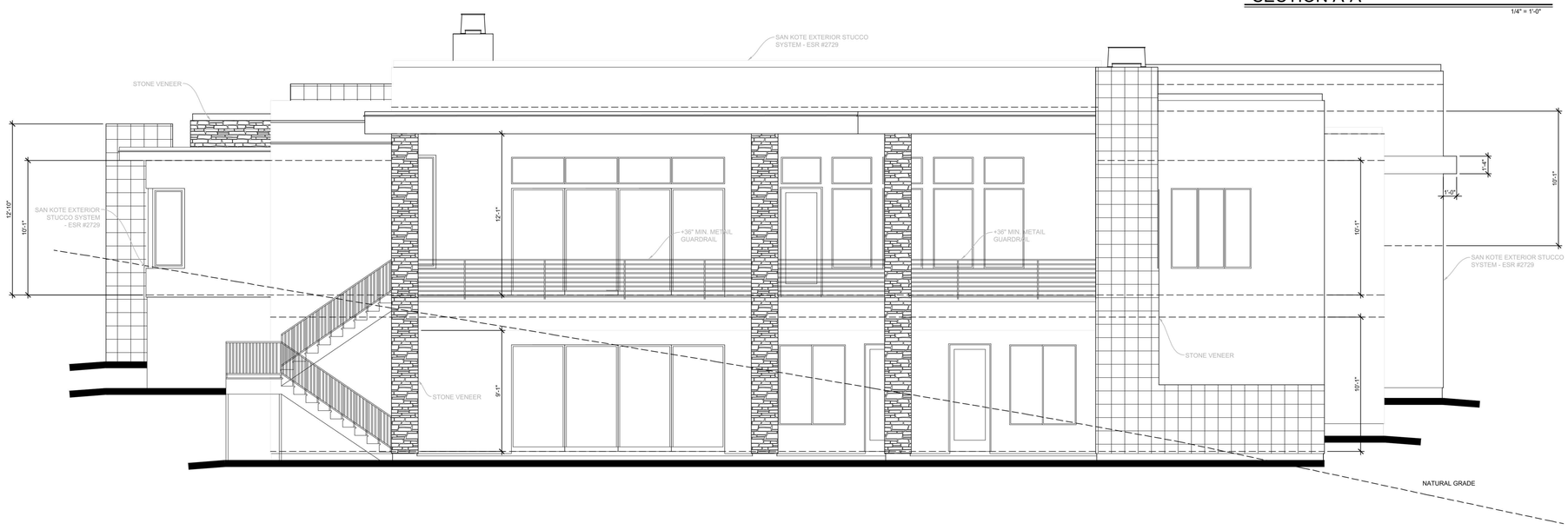

REAR ELEVATION

1/4" = 1'-0"

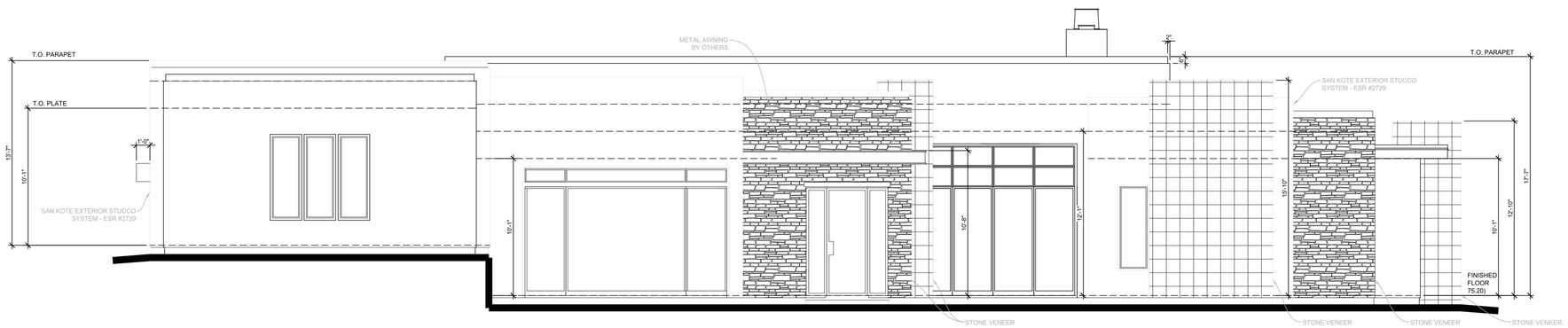

FRONT ELEVATION

1/4" = 1'-0"

brianscottdesign
4127 E. Mesquite St.
Gilbert, AZ 85296
602-999-1690
bromney@brianscottdesign.com

KASNOFF RESIDENCE

15546 E. TELEGRAPH DR.
FOUNTAIN HILLS, AZ.
85268

TITLE:
EXTERIOR ELEVATIONS
KASNOFF RESIDENCE

DATE: 8/06/21

APPROVED
07/11/2022

SHEET NUMBER

A1.3

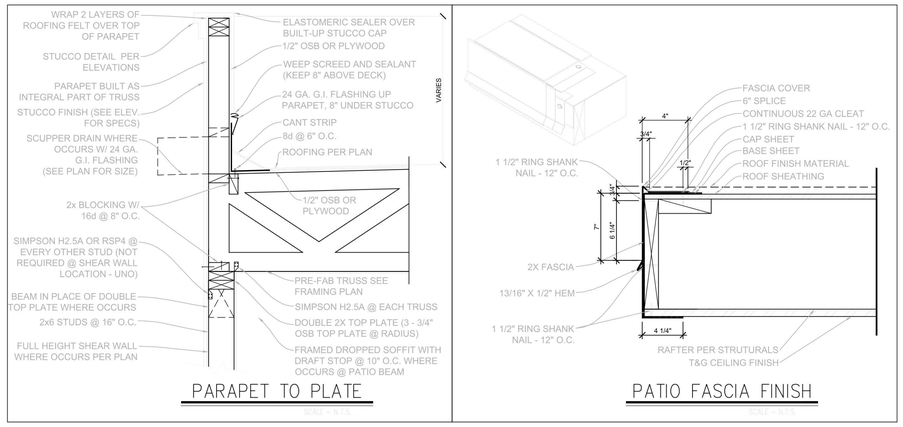

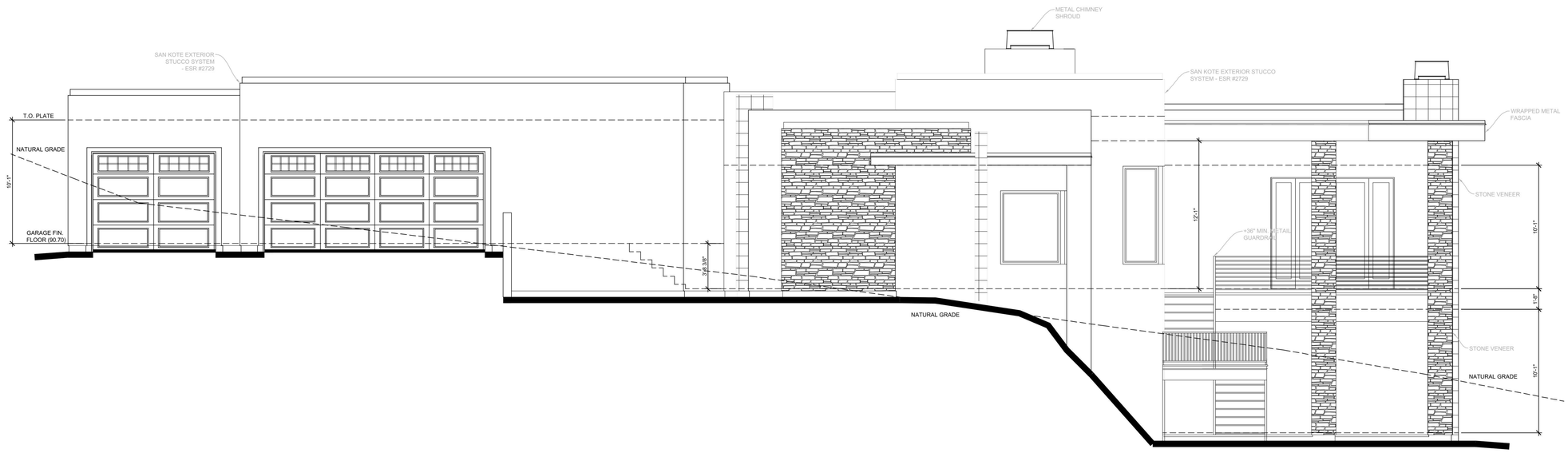

RIGHT ELEVATION

1/4" = 1'-0"

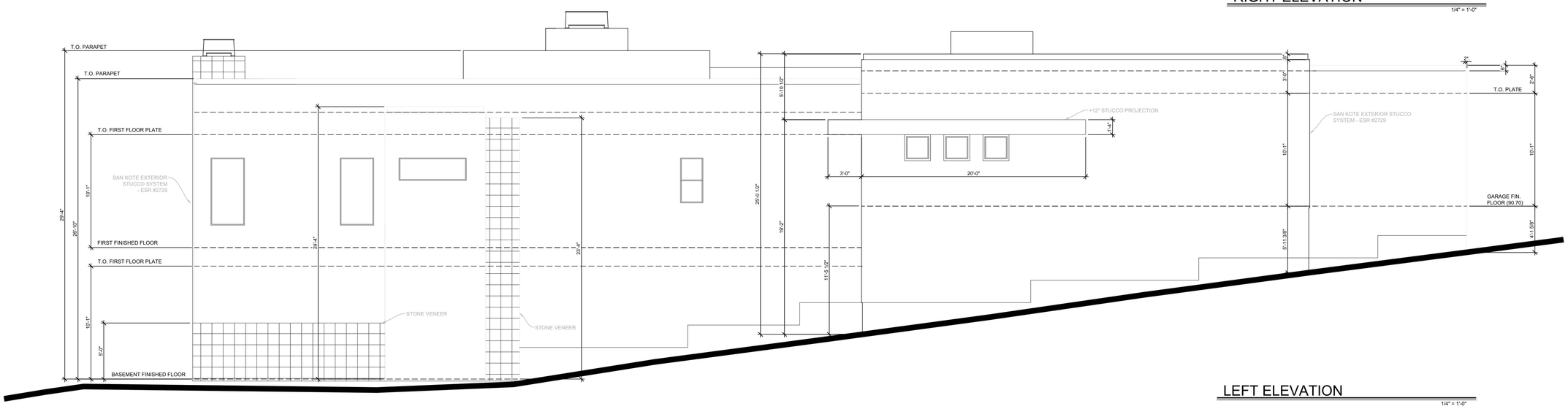

LEFT ELEVATION

1/4" = 1'-0"

brianscottdesign

4127 E. Mesquite St.
Gilbert, AZ 85296
602-999-1690

bromney@brianscottdesign.com

KASNOFF RESIDENCE

15546 E. TELEGRAPH DR.
FOUNTAIN HILLS, AZ.
85268

TITLE: EXTERIOR ELEVATIONS

KASNOFF RESIDENCE

DATE: 8/06/21

APPROVED
07/11/2022

SHEET NUMBER

A1.4

ROOF PLAN

1/4" = 1'-0"

brianscottdesign
4127 E. Mesquite St.
Gilbert, AZ 85296
602-999-1690
bromney@brianscottdesign.com

KASNOFF RESIDENCE

15546 E. TELEGRAPH DR.
FOUNTAIN HILLS, AZ.
85268

TITLE:
ROOF PLAN
KASNOFF RESIDENCE

DATE: 8/06/21

APPROVED
07/11/2022

SHEET NUMBER

A1.5

ELEC. LOAD CALCS – MAIN PANEL

			WATTS	
LIVABLE SQ. FT. X 3	3	X	4152	12456
SMALL APPLIANCE CIRCUITS	2	X	1500	3000
LAUNDRY CIRCUIT	2	X	1500	3000
WATER HEATER	0	X	4500	0
DISHWASHER	1	X	1500	1500
DRYER	1	X	5000	5000
RANGE	0	X	12000	0
WALL OVEN	0	X	6000	0
MICROWAVE	0	X	1500	0
WALL OVEN/MICROWAVE	1	X	12000	12000
DOUBLE WALL OVEN	0	X	12000	0
COOKTOP	0	X	6000	0
REFRIGERATOR	2	X	1500	3000
WHIRLPOOL TUB	0	X	1500	0
BATHROOM GFCI	4	X	1500	6000
CENTRAL VAC	0	X	1500	0
SOFT WATER	1	X	1500	1500
WATER RECIRC. PUMP	2	X	1500	3000
GARAGE EXTERIOR	1	X	1500	1500
LANDSCAPING	1	X	1500	1500
UNDER COUNTER REFRIGERATOR	3	X	1500	4500
WINE REFRIGERATOR	0	X	1500	0
FREEZER	1	X	1500	1500
SUBTOTAL				59,456
FIRST 10000 @ 100%			10,000	10,000
BALANCE @ 40%			49,456	19,782.4
SUBTOTAL CALCULATED DEMAND				29,782.4
ADDITIONAL LOADS				
1ST A/C			4,688	4,688
2ND A/C			5,290	5,290
3RD A/C			5,290	5,290
TOTAL A/C LOADS				15,268
POOL EQUIPMENT				2,000
TOTAL LOAD				47,050.4
PANEL LOAD – AMPS				196.04

PANEL SCHEDULE–SUB PANEL

METER PANEL TYPE–SQUARE D

#	USAGE	CB	WIRE
1, 3	ELECTRIC OVEN	2–40	8–3 CU W/G
5, 7	HVAC UNIT #3	2–50	8–3 AL W/G
9			
11			
13	AIR HANDLER #3	1–15	14–2 CU W/G
15	ARC FAULT – FAMILY ROOM	1–15	14–2 CU
17	ARC FAULT – BEDROOM	1–15	14–2 CU
19	GARBAGE DISP/DISHWASHER	1–20	12–2 CU W/G
21	SMOKE DETECTORS – ARC FAULT	1–15	14–2 CU
23	BATHROOM RECEPTACLES	1–20	12–2 CU W/G
25	KITCHEN APPLIANCES – ARC FAULT	1–20	12–2 CU W/G
27	GLC – FAMILY ROOM – ARC FAULT	1–15	14–2 CU
29	GLC – BEDROOM, BATH 3 – ARC F.	1–15	14–2 CU
31	GLC– PORCH, PATIO, GARAGE	1–15	14–2 CU
33	WH RECIRCULATOR	1–15	14–2 CU W/G
35			
37			
39			

1

PANEL SCHEDULE – MAIN PANEL

METER PANEL TYPE–SQUARE D SURFACE MOUNT 120/240 VOLT 1 PH–3W

#	USAGE	CB	WIRE	#	USAGE	CB	WIRE
1, 3	ELECTRIC OVEN	2–40	8–3 CU W/G	2	LAUNDRY	1–20	12–2 CU W/G
				4	SOFT WATER GFCI	1–15	14–2 CU W/G
5, 7	HVAC UNIT #1	2–50	8–3 AL W/G	6	REFRIGERATOR	1–20	12–2 CU W/G
				8	MICROWAVE	1–20	12–2 CU W/G
9, 11	HVAC UNIT #2	2–50	8–3 AL W/G	10	WASHER	1–20	12–2 CU W/G
				12	ARC FAULT – MASTER, FAMILY ROOM	1–15	14–2 CU
13				14	ARC FAULT – BEDS 2, 3, 4	1–15	14–2 CU
15				16	ARC FAULT – DINING, OFFICE	1–15	14–2 CU
17				18	ARC FAULT – GAME ROOM	1–15	14–2 CU
19				20	GARBAGE DISPOSAL/DISHWASHER	1–20	12–2 CU W/G
21	AIR HANDLER #1	1–15	14–2 CU W/G	22	SMOKE DETECTORS – ARC FAULT	1–15	14–2 CU
23	AIR HANDLER #2	1–15	14–2 CU W/G	24	BATHROOM RECEPTACLES	1–20	12–2 CU W/G
25				26	KITCHEN APPLIANCES – ARC FAULT	1–20	12–2 CU W/G
27				28	GLC – MASTER BATH, WIC – ARC F.	1–15	14–2 CU
29				30	GLC – HALL, FOYER, B3 – ARC. F	1–15	14–2 CU
31	SOFT WATER GFCI	1–15	14–2 CU W/G	32	GLC – POWDER, BATH 2	1–15	14–2 CU
33	WH RECIRCULATOR	1–15	14–2 CU W/G	34	GLC – LAUNDRY, GARAGE	1–15	14–2 CU
35	LANDSCAPING	1–20	12–2 CU W/G	36	GLC – DINING, KITCHEN – ARC F.	1–15	14–2 CU
37	GARAGE/EXTERIOR GFCI	1–20	12–2 CU W/G	38	GLC – OFFICE, GAME RM – ARC F.	1–15	14–2 CU
39	LAUNDRY	1–20	12–2 CU W/G	40	GLC– PORCH, PATIO, GARAGE	1–15	14–2 CU

1

400 AMP RESIDENTIAL SERVICE

SES 400 AMP 22,000 A/C

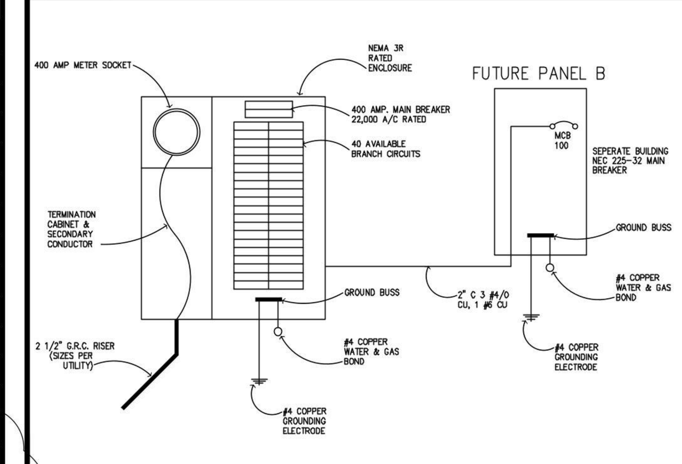

ELECTRICAL SPECIFICATIONS

1. WORK SHALL BE PERFORMED IN ACCORDANCE WITH THE NATIONAL ELECTRIC CODE AND ALL APPLICABLE RULES, REGULATIONS AND ORDINANCES.

2. PROVIDE PROPER GROUNDING FOR ALL EQUIPMENT, RACEWAYS, ETC.

3. ALL DISCONNECTS, FIXTURES AND OTHER ELECTRICAL COMPONENTS SUBJECT TO THE WEATHER MUST HAVE WEATHERPROOF ENCLOSURES.

4. ALL ROUGH–IN LOCATIONS SHOWN ARE APPROXIMATE. CONTRACTOR IS RESPONSIBLE FOR DETERMINING PROPER LOCATION.

5. PROVIDE DISCONNECTS, FUSES, OVER CURRENT PROTECTION, CONTROL AND POWER WIRING, CHORDS AND PLUGS TO ALL EQUIPMENT INCLUDED AS PART OF THIS PROJECT, IF REQUIRED FOR PROPER OPERATION BUT NOT PROVIDED BY THE EQUIPMENT MANUFACTURER. EQUIPMENT SHALL INCLUDE ALL HVAC, EXHAUST FANS, HOODS, KITCHEN EQUIPMENT, MEDICAL EQUIPMENT AND ANY SPECIAL EQUIPMENT SHOWN AS A PART OF THE PROJECT.

6. CONDUCTORS:

A. USE THW OR THWN #12 MINIMUM, 75° RATING.
B. FOR HOME RUNS OVER 65 FEET, USE ONE SIZE LARGER WIRE.
C. FOR HOME RUNS OVER 115 FEET, USE TWO SIZES LARGER WIRE.
D. ALUMINUM CONDUCTORS ARE NOT ALLOWED.

7. CONDUIT:

A. USE RIGID OR EMT AS ALLOWED BY CODE.
B. ALL CONDUITS EXPOSED TO THE ELEMENTS OR BURIED UNDERGROUND SHALL BE WRAPPED WITH SCOTCH 51 TAPE OR EQUAL.
C. MC TYPE PREWIRED FLEXIBLE CABLE SHALL BE PERMITTED IN ALL WALLS AND CEILINGS AS PERMITTED BY CODE AND LOCAL BUILDING OFFICIALS.

8. OVER CURRENT PROTECTION:

A. CIRCUIT BREAKERS THAT ARE TO BE USED TO PROTECT LIGHTING CIRCUITS ARE TO BE RATED FOR SWITCHING DUTY.
B. PROVIDE LOCK–ON DEVICES FOR NIGHT LIGHT, EMERGENCY AND EXIT LIGHT CIRCUITS.
C. ALL RECEPTACLES AND FIXED EQUIPMENT WITHIN AREA OF WET LOCATION NEED GROUND–FAULT CIRCUIT INTERRUPTER PROTECTION PER NEC 517.20.

1

9. PER 2015 E3902.12 ALL BRANCH CIRCUITS THAT SUPPLY 120–VOLT, SINGLE–PHASE, 15– AND 20–AMPERE OUTLETS INSTALLED IN KITCHENS, FAMILY ROOMS, DINING ROOMS, LIVING ROOMS, PARLORS, LIBRARIES, DENS, BEDROOMS, SUNROOMS, RECREATIONS ROOMS, CLOSETS, HALLWAYS AND SIMILAR ROOMS OR AREAS SHALL BE PROTECTED BY A COMBINATION TYPE ARC–FAULT CIRCUIT INTERRUPTER INSTALLED TO PROVIDE PROTECTION OF THE BRANCH CIRCUIT.

10. ALL OUTLETS ARE TO BE TAMPER RESISTANCE PER IRC 2015 E4002.14

SYMBOL	DESCRIPTION
	4' TRACK WITH (3) HEADS
	UNDER CABINET FLUORESCENT STRIP LIGHT
	PENDANT LIGHT FIXTURE
	CEILING MOUNTED LIGHT
	WALL MOUNTED SCONCE
	RECESSED CAN LIGHT
	EXHAUST FAN
$	SWITCH BETWEEN 36" TO 54" A.F.F.
$3	3 WAY SWITCH BETWEEN 36" TO 54" A.F.F.
$D	DIMMER SWITCH BETWEEN 36" TO 54" A.F.F.
	IN SLAB OUTLET (110V) @ 15" A.F.F.
	DUPLEX OUTLET (110V) @ 15" A.F.F.
	110V OUTLET 6" ABOVE COUNTER U.N.O.
	SINGLE SWITCH OUTLET
	WALL MOUNTED PORCELAIN SOCKET
GFCI	GROUND FAULT INTERRUPT OUTLET (110V)
WP GFCI	WEATHERPROOF OUTLET (110V)
	220V OUTLET
	JUNCTION BOX
	DISCONNECT SWITCH
	PHONE/ DATA JACK – CONDUIT WITH PULL STRING TO ABOVE CEILING
	PHONE JACK – CONDUIT WITH PULL STRING TO ABOVE CEILING
	DATA JACK – CONDUIT WITH PULL STRING TO ABOVE CEILING
	CONDUIT
	ELECTRICAL PANEL
	DUPLEX RECEPTACLE
	J–BOX
GFI	DUPLEX RECEPTACLE W/ ROUND FAULT PROTECTION
WP–GF	DUPLEX RECEPTACLE W/ ROUND FAULT PROTECTION AND WET GRADE EXTERIOR COVER
	220V RECEPTACLE
$	SINGLE POLE SWITCH
$3	THREE WAY SWITCH
	SMOKE DETECTOR – HARD WIRED, WITH BATTERY BACKUP
	WALL MOUNTED LIGHT
	FLUORESCENT LIGHT FIXTURE
	FLOOD LIGHT FIXTURE
GD	GARAGE DOOR
1/2	HALF HOT OUTLET
	PHONE LINE
TV	CABLE TELEVISION
	EYE BALL CAN LIGHT
D	DOOR BELL
CHIMES	DOOR BELL CHIMES
ELEC.	PANELBOARD W/ CIRCUIT BREAKERS
HB	HOSE BIB
	GAS TAP
CW HW	COLD/HOT WATER SUPPLY

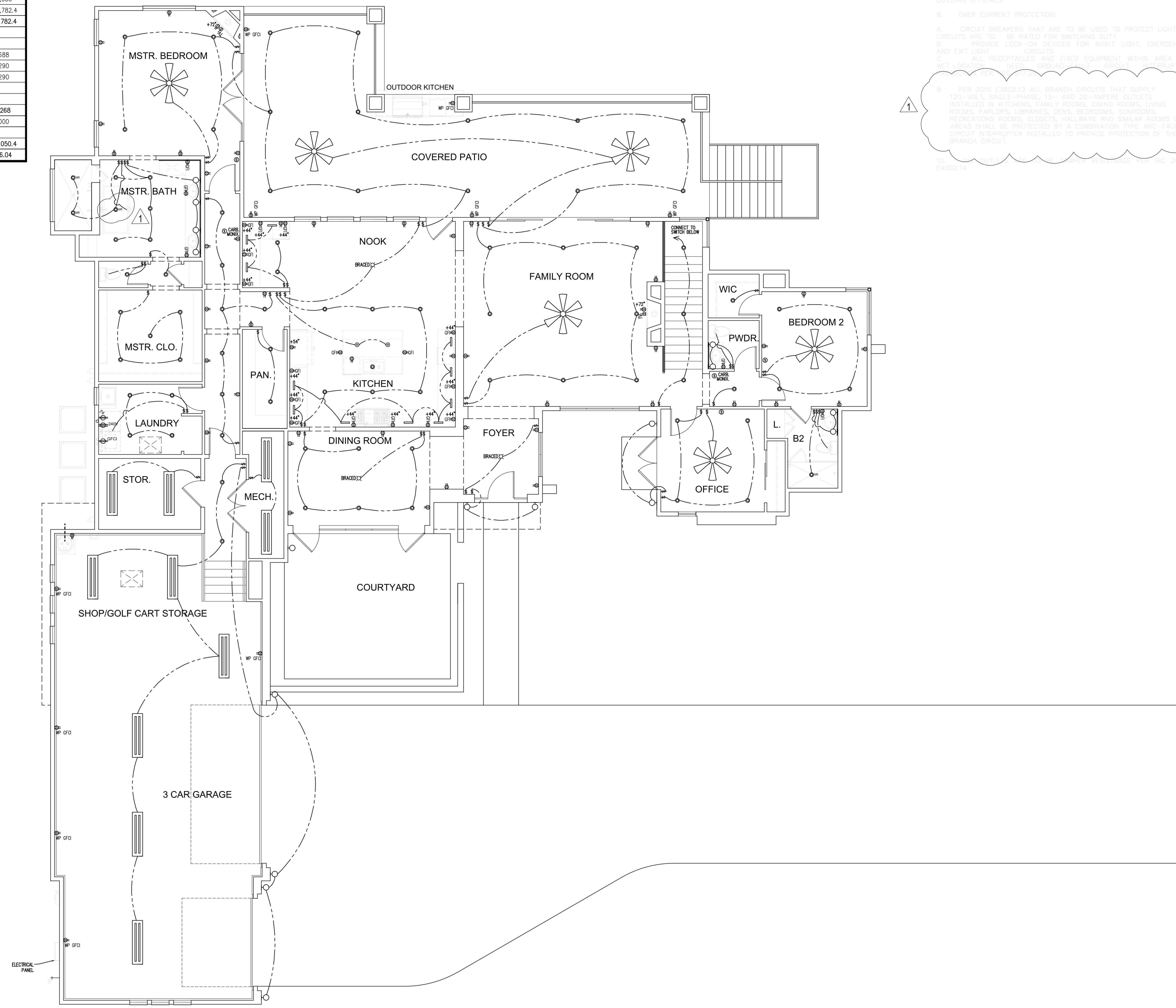

ELECTRCIAL PLAN
3/16" = 1'-0"

brianscottdesign
4127 E. Mesquite St.
Gilbert, AZ 85296
602-999-1690
bromney@brianscottdesign.com

KASNOFF RESIDENCE

15546 E. TELEGRAPH DR.
FOUNTAIN HILLS, AZ. 85268

TITLE: ELECTRICAL PLAN
KASNOFF RESIDENCE

DATE: 8/06/21

APPROVED
07/11/2022
TOWN OF FOUNTAIN HILLS

SHEET NUMBER
E1.1

ELECTRICAL SPECIFICATIONS

1. WORK SHALL BE PERFORMED IN ACCORDANCE WITH THE NATIONAL ELECTRIC CODE AND ALL APPLICABLE RULES, REGULATIONS AND ORDINANCES.

2. PROVIDE PROPER GROUNDING FOR ALL EQUIPMENT, RACEWAYS, ETC.

3. ALL DISCONNECTS, FIXTURES AND OTHER ELECTRICAL COMPONENTS SUBJECT TO THE WEATHER MUST HAVE WEATHERPROOF ENCLOSURES.

4. ALL ROUGH-IN LOCATIONS SHOWN ARE APPROXIMATE. CONTRACTOR IS RESPONSIBLE FOR DETERMINING PROPER LOCATION.

5. PROVIDE DISCONNECTS, FUSES, OVER CURRENT PROTECTION, CONTROL AND POWER WIRING, CHORDS AND PLUGS TO ALL EQUIPMENT INCLUDED AS PART OF THIS PROJECT, IF REQUIRED FOR PROPER OPERATION BUT NOT PROVIDED BY THE EQUIPMENT MANUFACTURER. EQUIPMENT SHALL INCLUDE ALL HVAC, EXHAUST FANS, HOODS, KITCHEN EQUIPMENT, MEDICAL EQUIPMENT AND ANY SPECIAL EQUIPMENT SHOWN AS A PART OF THE PROJECT.

6. CONDUCTORS:

A. USE THW OR THWN #12 MINIMUM, 75° RATING.
B. FOR HOME RUNS OVER 65 FEET, USE ONE SIZE LARGER WIRE.
C. FOR HOME RUNS OVER 115 FEET, USE TWO SIZES LARGER WIRE.
D. ALUMINUM CONDUCTORS ARE NOT ALLOWED.

7. CONDUIT:

A. USE RIGID OR EMT AS ALLOWED BY CODE.
B. ALL CONDUITS EXPOSED TO THE ELEMENTS OR BURIED UNDERGROUND SHALL BE WRAPPED WITH SCOTCH 51 TAPE OR EQUAL.
C. MC TYPE PREWIRED FLEXIBLE CABLE SHALL BE PERMITTED IN ALL WALLS AND CEILINGS AS PERMITTED BY CODE AND LOCAL BUILDING OFFICIALS.

8. OVER CURRENT PROTECTION:

A. CIRCUIT BREAKERS THAT ARE TO BE USED TO PROTECT LIGHTING CIRCUITS ARE TO BE RATED FOR SWITCHING DUTY.
B. PROVIDE LOCK-ON DEVICES FOR NIGHT LIGHT, EMERGENCY AND EXIT LIGHT CIRCUITS.
C. ALL RECEPTACLES AND FIXED EQUIPMENT WITHIN AREA OF WET LOCATION NEED GROUND-FAULT CIRCUIT INTERRUPTER PROTECTION PER NEC 517.20.

9. PER 2015 E3902.12 ALL BRANCH CIRCUITS THAT SUPPLY 120-VOLT, SINGLE-PHASE, 15- AND 20-AMPERE OUTLETS INSTALLED IN FAMILY ROOMS, DINING ROOMS, LIVING ROOMS, PARLORS, LIBRARIES, DENS, BEDROOMS, SUNROOMS, RECREATIONS ROOMS, CLOSETS, HALLWAYS AND SIMILAR ROOMS OR AREAS SHALL BE PROTECTED BY A COMBINATION TYPE ARC-FAULT CIRCUIT INTERRUPTER INSTALLED TO PROVIDE PROTECTION OF THE BRANCH CIRCUIT.

10. ALL OUTLETS ARE TO BE TAMPER RESISTANCE PER IRC 2015 E4002.14

SYMBOL	DESCRIPTION
	4" TRACK WITH (3) HEADS
	UNDER CABINET FLUORESCENT STRIP LIGHT
	PENDANT LIGHT FIXTURE
	CEILING MOUNTED LIGHT
	WALL MOUNTED SCONCE
	RECESSED CAN LIGHT
	EXHAUST FAN
	SWITCH BETWEEN 36" TO 54" A.F.F.
	3 WAY SWITCH BETWEEN 36" TO 54" A.F.F.
	DIMMER SWITCH BETWEEN 36" TO 54" A.F.F.
	IN SLAB OUTLET (110V) @ 15" A.F.F.
	DUPLEX OUTLET (110V) @ 15" A.F.F.
	110V OUTLET 6" ABOVE COUNTER U.N.O.
	SINGLE SWITCH OUTLET
	WALL MOUNTED PORCELAIN SOCKET
GFCI	GROUND FAULT INTERRUPT OUTLET (110V)
WP GFCI	WEATHERPROOF OUTLET (110V)
	220V OUTLET
	JUNCTION BOX
	DISCONNECT SWITCH
	PHONE/ DATA JACK – CONDUIT WITH PULL STRING TO ABOVE CEILING
	PHONE JACK – CONDUIT WITH PULL STRING TO ABOVE CEILING
	DATA JACK – CONDUIT WITH PULL STRING TO ABOVE CEILING
	CONDUIT
	ELECTRICAL PANEL
	DUPLEX RECEPTACLE
	J-BOX
GFI	DUPLEX RECEPTACLE W/ ROUND FAULT PROTECTION
WP-GFI	DUPLEX RECEPTACLE W/ ROUND FAULT PROTECTION AND WET GRADE EXTERIOR COVER
	220V RECEPTACLE
	SINGLE POLE SWITCH
	THREE WAY SWITCH
	SMOKE DETECTOR – HARD WIRED, WITH BATTERY BACKUP
	WALL MOUNTED LIGHT
	FLUORESCENT LIGHT FIXTURE
	FLOOD LIGHT FIXTURE
	GARAGE DOOR
1/2	HALF HOT OUTLET
	PHONE LINE
TV	CABLE TELEVISION
	EYE BALL CAN LIGHT
D	DOOR BELL
CHIMES	DOOR BELL CHIMES
ELEC.	PANELBOARD W/ CIRCUIT BREAKERS
HB	HOSE BIB
	GAS TAP
CW HW	COLD/HOT WATER SUPPLY

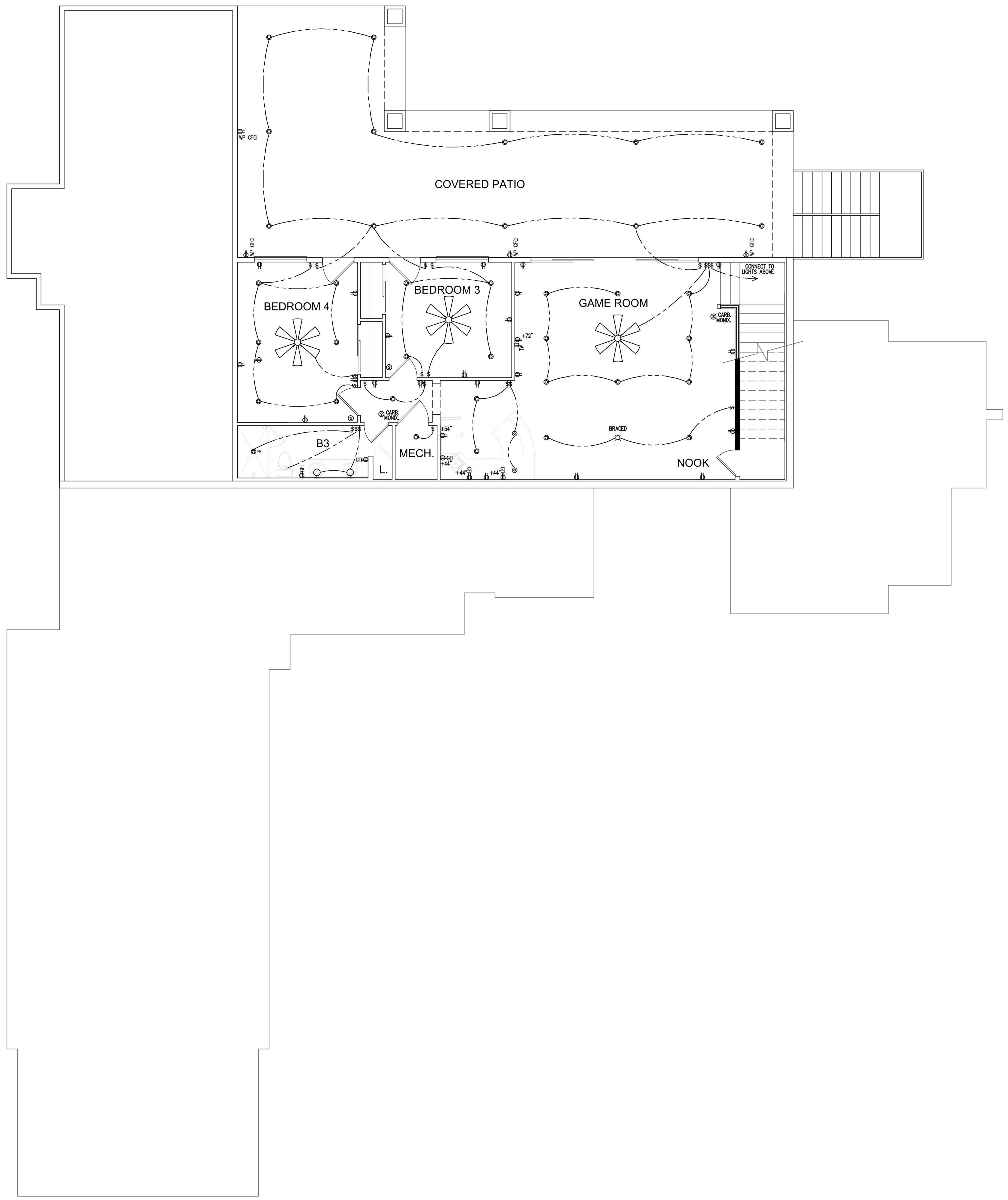

ELECTRCIAL PLAN

3/16" = 1'-0"

briancscottdesign
4127 E. Mesquite St.
Gilbert, AZ 85296
602-999-1690
bromney@brianscottdesign.com

KASNOFF RESIDENCE

15546 E. TELEGRAPH DR.
FOUNTAIN HILLS, AZ.
85268

TITLE: ELECTRICAL PLAN
KASNOFF RESIDENCE

DATE: 8/06/21

APPROVED
07/11/2022

SHEET NUMBER

E1.2

PLUMBING

NOTES:
1. PLUMBING SHALL BE IN ACCORDANCE WITH THE IRC AND ALL APPLICABLE CITY ORDINACES.
2. WASTE AND VENT PIPE SHALL BE ABS PLASTIC PVC SCHEDULE 40
3. THIS DIAGRAM IS FOR PIPE SIZE AND CLEAN OUT LOCATION ONLY. SIZE PIPE ACCORDING TO IRC.
4. PROVIDE PRESSURE BALANCE OR THERMOSTATIC MIXING VALVE TYPE CONTROL VALVES FOR ALL SHOWER TUB/SHOWER AND WHIRLPOOL TUB COMBINATIONS
5. SURFACE DRAINAGE SHALL BE DIVERTED TO A STORM SEWER CONVEYANCE OR OTHER APPROVED POINT OF COLLECTION AS TO NOT CREATE A HAZARD.

WATER METER CALCS

TYPE OF FIXTURE	NO. OF FIXTURES	FIXTURE UNIT VALUE		TOTAL
BATHTUB	1	1.4	=	1.4
CLOTHES WASHER	0	1.4	=	0
DISHWASHER	0	1.4	=	0
HOSEBIB	3	2.5	=	7.5
KITCHEN SINK	0	1.4	=	0
LAUNDRY TUB	1	1.4	=	1.4
LAVATORY/BAR SINK	1	0.7	=	0.7
SHOWER STALL	0	1.4	=	0
WATER CLOSET	0	2.2	=	0
FULL BATH GROUP	3	3.6	=	10.8
HALF BATH GROUP	1	2.6	=	2.6
KITCHEN GROUP	1	2.5	=	2.5
LAUNDRY GROUP	1	2.5	=	2.5
TOTAL			=	29.4

EFFECTIVE WATER PRESSURE FOR THIS COMMUNITY 40-49 PSI OR 49-60 PSI
DEVELOPED LENGTH: 190' WATER METER 1" MIN. SUPPLY LINE: 1 1/4" MIN.

NOTES:
1. ALL CALCULATIONS CONFORM TO IRC TABLES P2903.6 AND P2903.7
2. WATER CALCULATIONS INCLUDE ALL OPTIONAL FIXTURES
3. WATER SUPPLY OUTLETS FOR ITEMS NOT SHOWN ABOVE SHALL BE COMPUTED AT THEIR MAXIMUM DEMAND OR ACCORDING TO THE SIZE OF THE SUPPLY PIPE AS LISTED ABOVE - WHICHEVER IS GREATER
4. PRESSURE REDUCING VALVE INSTALLATION TO BE DETERMINED BY MUNICIPALITY

brianscottdesign
4127 E. Mesquite St.
Gilbert, AZ 85296
602-999-1690
bromney@brianscottdesign.com

KASNOFF RESIDENCE

15546 E. TELEGRAPH DR.
FOUNTAIN HILLS, AZ.
85268

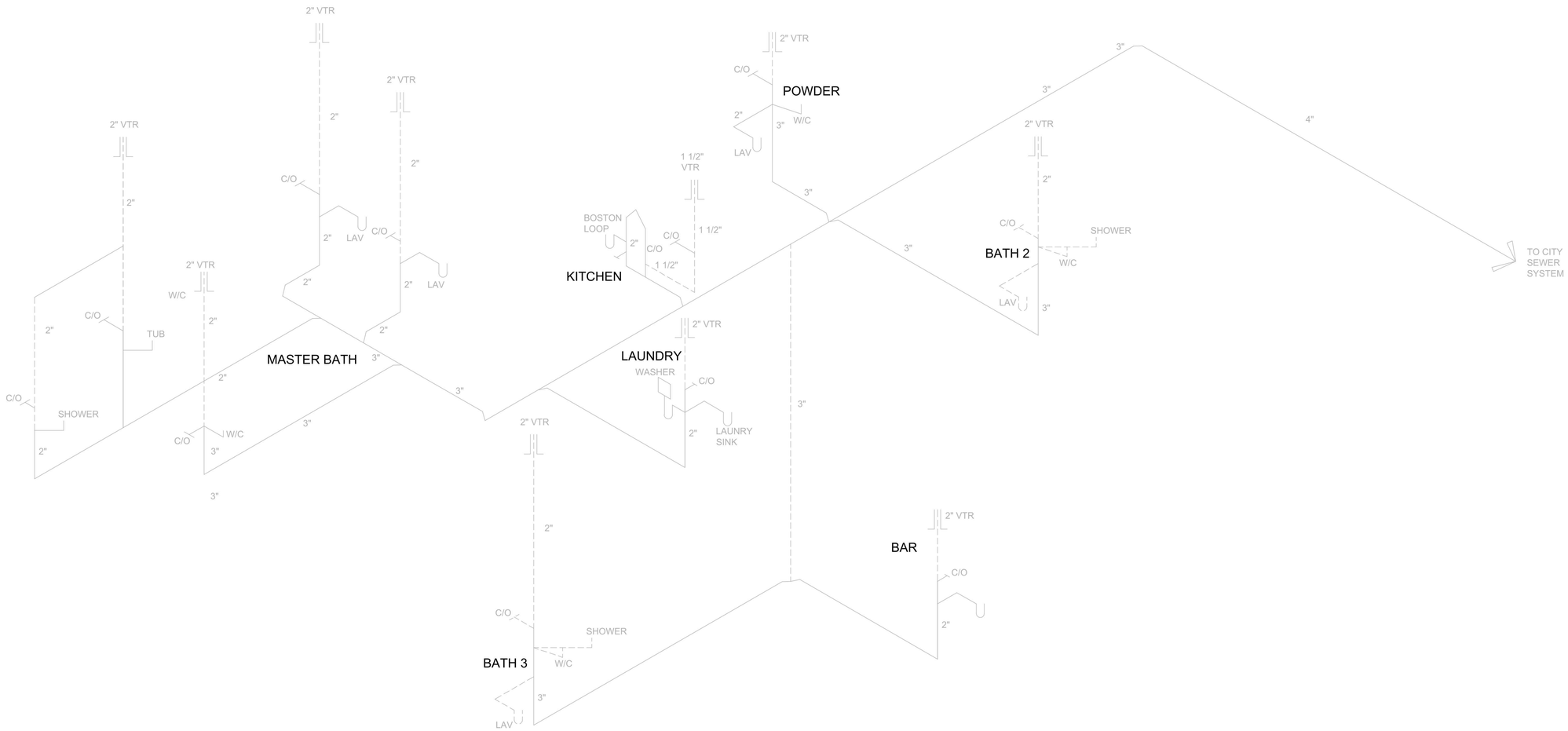

PLUMBING SCHEMATIC
N.T.S.

TITLE: PLUMBING SCHEMATIC
KASNOFF RESIDENCE

DATE: 8/06/21

APPROVED
07/11/2022

SHEET NUMBER
P1.1

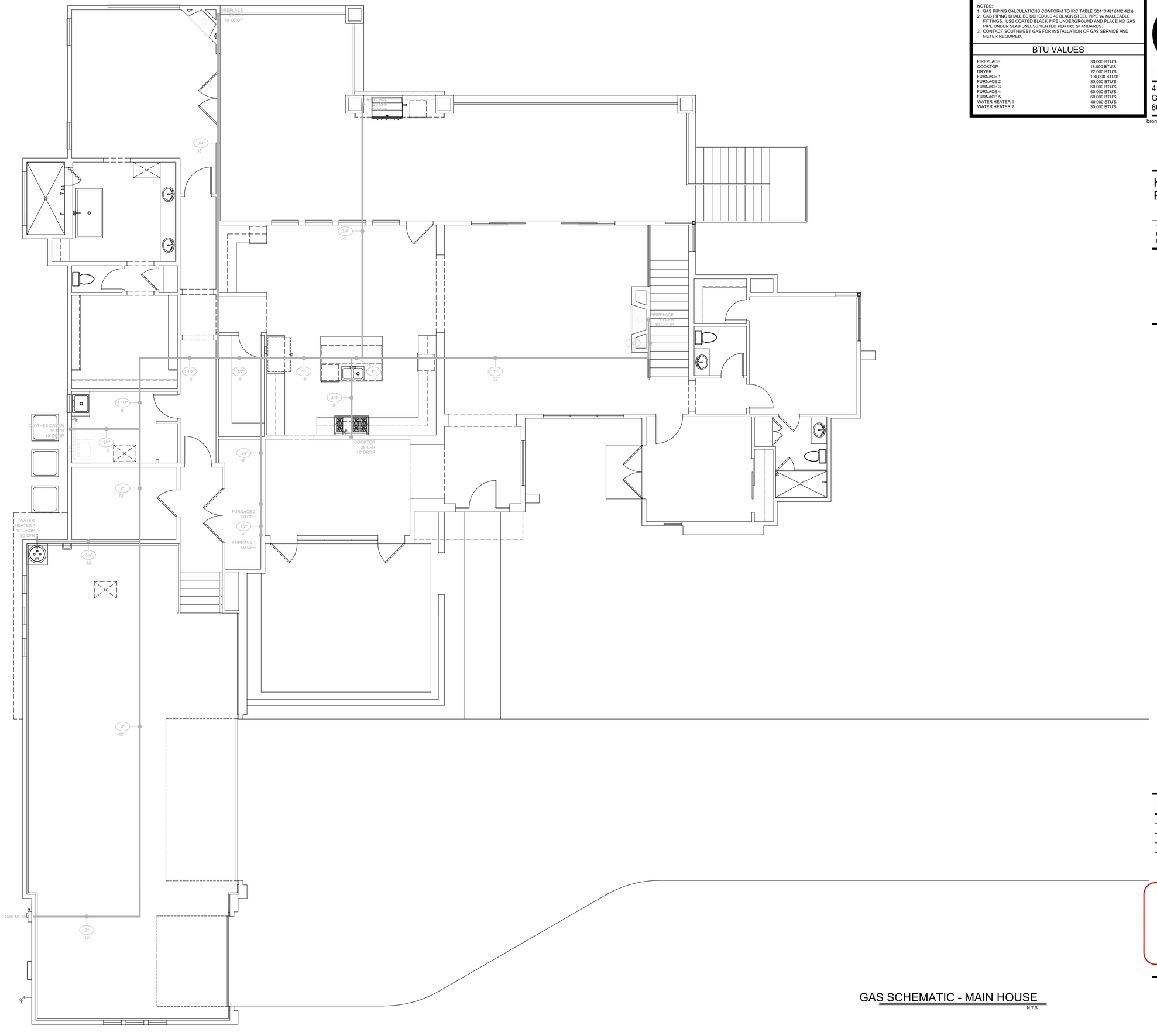

GAS SCHEMATIC - MAIN HOUSE

N.T.S.

GAS

NOTES:
1. GAS PIPING CALCULATIONS CONFORM TO IRC TABLE G2413.4(1)(402.4(2))
2. GAS PIPING SHALL BE SCHEDULE 40 BLACK STEEL PIPE W/ MALLEABLE FITTINGS. USE COATED BLACK PIPE UNDERGROUND AND PLACE NO GAS PIPE UNDER SLAB UNLESS VENTED PER IRC STANDARDS.
3. CONTACT SOUTHWEST GAS FOR INSTALLATION OF GAS SERVICE AND METER REQUIRED.

BTU VALUES

FIREPLACE	30,000 BTU'S
COOKTOP	18,000 BTU'S
DRYER	22,000 BTU'S
FURNACE 1	100,000 BTU'S
FURNACE 2	80,000 BTU'S
FURNACE 3	60,000 BTU'S
FURNACE 4	60,000 BTU'S
FURNACE 5	60,000 BTU'S
WATER HEATER 1	40,000 BTU'S
WATER HEATER 2	30,000 BTU'S

briancottdesign
4127 E. Mesquite St.
Gilbert, AZ 85296
602-999-1690
bromney@briancottdesign.com

KASNOFF RESIDENCE

15546 E. TELEGRAPH DR.
FOUNTAIN HILLS, AZ.
85268

TITLE:
GAS SCHEMATIC
KASNOFF RESIDENCE

DATE: 8/06/21

APPROVED
07/11/2022

SHEET NUMBER

P1.2

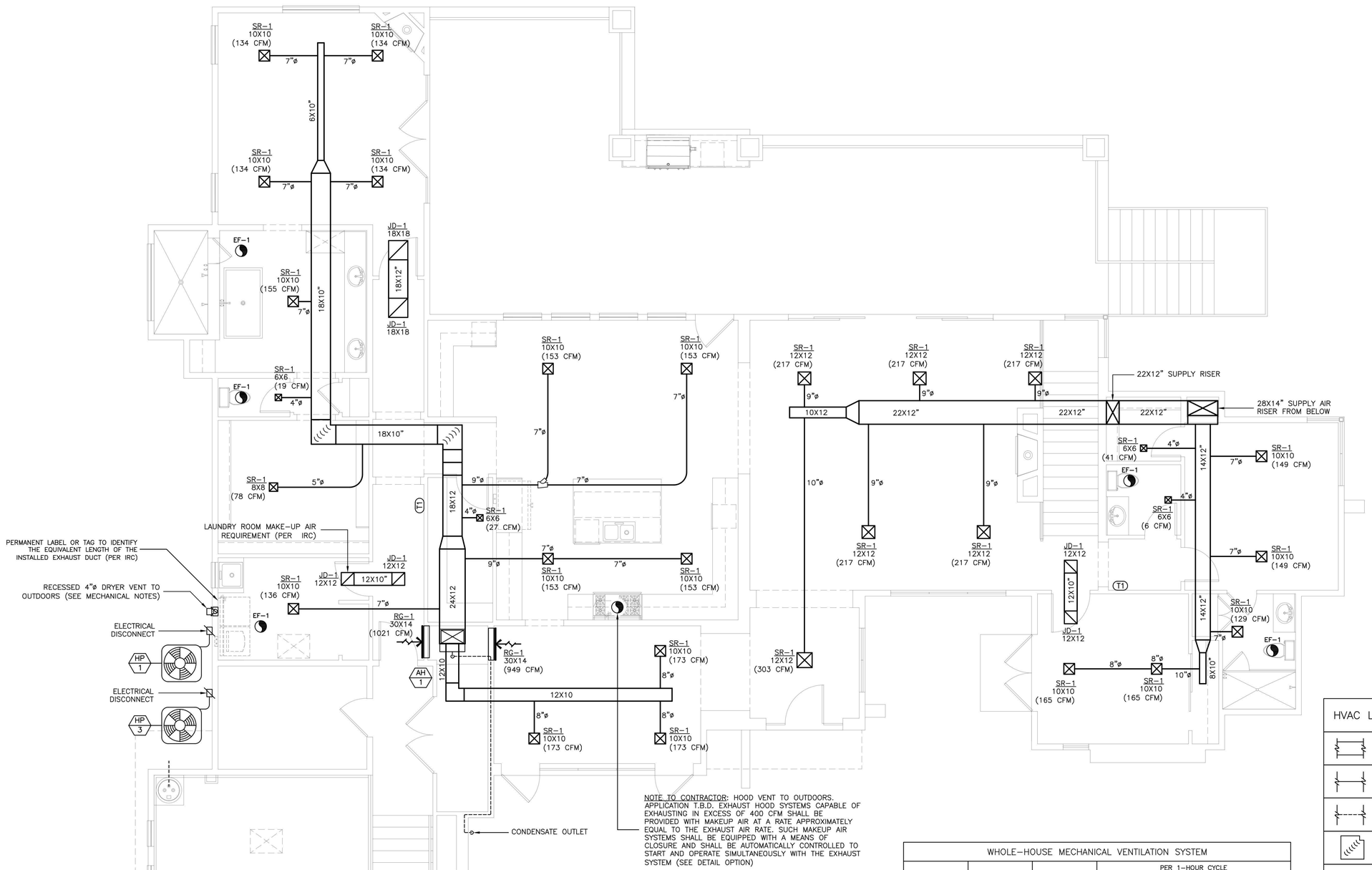

NOTE TO CONTRACTOR: HOOD VENT TO OUTDOORS. APPLICATION T.B.D. EXHAUST HOOD SYSTEMS CAPABLE OF EXHAUSTING IN EXCESS OF 400 CFM SHALL BE PROVIDED WITH MAKEUP AIR AT A RATE APPROXIMATELY EQUAL TO THE EXHAUST AIR RATE. SUCH MAKEUP AIR SYSTEMS SHALL BE EQUIPPED WITH A MEANS OF CLOSURE AND SHALL BE AUTOMATICALLY CONTROLLED TO START AND OPERATE SIMULTANEOUSLY WITH THE EXHAUST SYSTEM (SEE DETAIL OPTION)

WHOLE-HOUSE MECHANICAL VENTILATION SYSTEM

FLOOR AREA (SQ. FT.)	NUMBER OF BEDROOMS	REQUIRED VENTILATION* (CFM)	PER 1-HOUR CYCLE		
			OUTDOOR AIR DELIVERY RATE (CFM)	REQUIRED CYCLE TIME (MINUTES)	MEANS OF FORCED AIR
4154	5	86.54	170	30.54	SYSTEM BLOWER

*CALCULATED FROM IRC TABLES. APRILAIRE MODEL 8145 FRESH AIR VENILATION SYSTEM SPECIFIED AND INSTALLED PER MANUFACTURERS INSTRUCTIONS. CONTRACTOR MAY CHOOSE OTHER METHOD OF VENTILATION SO LONG AS IT MEETS THE REQUIREMENTS ESTABLISHED IN IRC TABLES

VENTILATION DETAIL

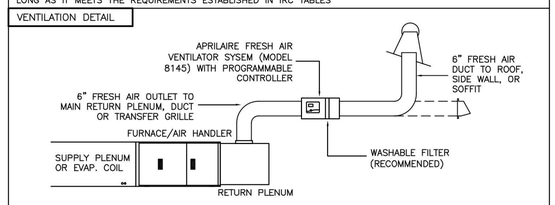

MAKE-UP AIR FOR RANGE EXHAUSE (IF REQUIRED)

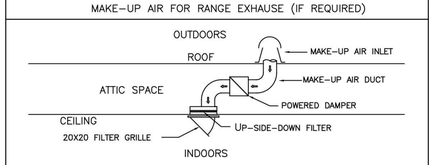

1. MAKE-UP AIR REQUIRED FOR RANGE EXHAUST IN EXCESS OF 400 CFM
2. POWER DAMPER TO BE INTERLOCKED WITH RANGE HOOD BY ELECTRONIC RELAY OR PRESSURE SWITCH (CONTRACTOR CHOICE)
3. POWER DAMPER MUST HAVE AN ON/OFF SWITCH ACCESSIBLE TO THE HOME OWNER
4. MAKE-UP AIR GRILLE MUST INCLUDE A FILTER ACCESSIBLE TO THE HOME OWNER

HVAC LEGEND

	RIGID DUCT (MIN. 26 AWG.). REFER TO DRAWING FOR SIZE.
	FLEX DUCT (R-6). REFER TO DRAWING FOR SIZE.
	UNDERGROUND PVC DUCT WORK. REFER TO DRAWING FOR SIZE.
	RIGID 90° ELBOW WITH TURNING VANES
T1	7-DAY PROGRAMMABLE THERMOSTAT
	RECTANGULAR CEILING SUPPLY REGISTER. REFER TO DRAWING FOR SIZE AND SCHEDULE FOR TYPE.
	SQUARE 4-WAY SUPPLY REGISTER W/OBD. REFER TO DRAWING FOR SIZE AND SCHEDULE FOR TYPE.
	RECTANGULAR SIDEWALL SUPPLY REGISTER. REFER TO DRAWING FOR SIZE AND SCHEDULE FOR TYPE.
	SIDEWALL RETURN GRILLE. REFER TO DRAWING FOR SIZE AND SCHEDULE FOR TYPE.
	AIR TRANSFER FOR VENTILATION AND/OR MAKE-UP AIR. REFER TO DRAWING FOR SIZE AND SCHEDULE FOR TYPE.
	VENTILATION PIPE OR FAN. REFER TO DRAWING FOR NOTATON AND SCHEDULE FOR TYPE/SIZE.

MDS

DRAWN: C. CLINE

DATE: 6/7/22

SCALE: 1/4"=1'-0"

Mechanical Design Services, LLC
19718 W. AMELIA AVE.
BUCKEYE, AZ 85396
PH: (602) 628-2061 FAX: (623) 322-3779

KASNOFF RESIDENCE

15546 E. TELEGRAPH DR.
FOUNTAIN HILLS, AZ 85268

REVISIONS:
REVISIONS:
REVISIONS:
REVISIONS:
REVISIONS:

APPROVED
07/11/2022

M-1

GENERAL MECHANICAL NOTES:

EQUIPMENT SIZING: HEATING AND COOLING EQUIPMENT WAS SIZED AND SELECTED IN ACCORDANCE WITH ACCA MANUAL-S BASED ON BUILDING LOAD CALULATION IN ACCORDANCE WITH ACCA MANAUL-J (SEE REPORTS).

AIR DUCT INSULATION: ALL SUPPLY DUCTS IN THE ATTIC SPACE OUTSIDE THE THERMAL ENVELOPE (ABOVE THE INSULATION LINE) SHALL BE INSULATED TO MINIMUM OF R-8. ALL OTHER DUCTS, OR DUCTS INSIDE THE THERMAL ENVELOPE (UNDER THE INSULATION LINE) MAY BE INSULATED TO A MINIMUM OF R-6.

DUCT SEALING: ALL JOINTS, LONGITUDINAL AND TRANSVERSE SEAMS, AND CONNECTIONS IN DUCTWORK SHALL BE SECURELY FASTENED AND SEALED WITH WELDS, GASKETS, MASTICS (ADHESIVES), MASTIC-PLUS-EMBEDDED-FABRIC SYSTEMS OR TAPES. PROVIDE DUCT TIGHTNESS TESTING CONDUCTED BY AN APPROVED THIRD PARTY TESTING AGENGY (BPI OR RESNET CERTIFIED) AND THE SIGNED WRITTEN RESULTS SHALL BE SUBMITTED TO THE CODE OFFICIAL PRIOR TO BUILDING FINAL. DUCT TIGHTNESS SHALL BE VERIFIED BY EITHER OF THE FOLLOWING:

POST-CONSTRUCTION TEST: TOTAL LEAKAGE SHALL BE LESS THAN OR EQUAL TO 4 CFM PER 100 SQUARE FEET OF CONDITIONED FLOOR AREA WHEN TESTED AT A PRESSURE DIFFERENTIAL OF 0.1 INCHES W.G. (25 PA) ACROSS THE ENTIRE SYSTEM. ALL REGISTER BOOTS SHALL BE TAPED OR OTHERWISE SEALED DURING TESTING.

ROUGH-IN TEST: TOTAL LEAKAGE SHALL BE LESS THAN OR EQUAL TO 4 CFM PER 100 SQUARE FEET OF CONDITIONED FLOOR AREA WHEN TESTED AT A PRESSURE DIFFERENTIAL OF 0.1 INCHES W.G. (25 PA) ACROSS THE ENTIRE SYSTEM. ALL REGISTER BOOTS SHALL BE TAPED OR OTHERWISE SEALED DURING TESTING. IF THE AIR HANDLER IS NOT INSTALLED AT THE TIME OF THE TEST, TOTAL LEAKAGE SHALL BE LESS THAN OR EQUAL TO 3 CFM PER 100 SQUARE FEET OF CONDITIONED FLOOR AREA.

BUILDING ENVELOPE: THE DWELLING UNIT SHALL BE TESTED AND VERIFIED AS HAVING AN AIR LEAKAGE RATE OF NOT EXCEEDING 5 AIR CHANGES PER HOUR. TESTING SHALL BE CONDUCTED WITH A BLOWER DOOR AT A PRESSURE OF 0.2 INCHES W.G. (50 PA). TESTING SHALL BE CONDUCTED BY AN APPROVED THIRD PARTY, (BPI OR RESNET CERTIFIED). A WRITTEN REPORT OF THE RESULTS OF THE TEST SHALL BE SIGNED BY THE PARTY CONDUCTING THE TEST AND PROVIDED TO THE BUILDING OFFICIAL. TESTING SHALL BE PERFORMED ANY TIME AFTER CREATION OF ALL PENETRATIONS OF THE BUILDING THERMAL ENVELOPE.

CONDENSATE DISPOSAL: CONDENSATE FROM ALL COOLING COILS AND EVAPORATORS SHALL CONSIST OF 3/4" PVC PIPING WITH A MINIMUM SLOPE IN THE DIRECTION OF DISCHARGE NOT LESS THAN 1/8" VERTICLE FALL OVER EACH 12" SECTION OF PIPE. SUCH PIPING SHALL BE CONVEYED FROM THE PRIMARY DRAIN PAN OUTLET TO AN APPROVED PLACE OF DISPOSAL. A WATER-LEVEL DETECTION DEVICE CONFORMING TO UL 508 SHALL BE INSTALLED AT THE HIGHER SECONDARY OUTLET PORT OF THE EVAPORATOR COIL AND WIRED TO SHUT OFF THE EQUIPMENT SERVED IN THE EVENT OF BLOCKAGE IN THE PRIMARY DRAIN LINE. THE SECONDARY DRAIN PIPING MAY TIE BACK INTO THE PRIMARY DRAIN LINE DOWN STREAM FROM THE REQUIRED P-TRAP AND BREATHER VALVE.

DRYER VENT: THE MAXIMUM LENGTH OF THE EXHAUST DUCT SHALL BE 35 FEET FROM THE CONNECTION TO THE FLEXIBLE TRANSITION DUCT FROM THE DRYER TO THE OUTLET TERMINAL (WALL CAP WITH BACKDRAFT DAMPER OR NON-SCREENED T-TOP). WHERE FITTINGS ARE USED, THE MAXIMUM DRYER DUCT LENGTH SHALL BE REDUCED AS FOLLOWS: 2.5 FEET FOR EVERY 45° ELBOW, AND 5' FOR EVERY 90° ELBOW.

MAKEUP AIR: EXHAUST HOOD SYSTEMS CAPABLE OF EXHAUSTING IN EXCESS OF 400 CFM SHALL BE PROVIDED WITH MAKEUP AIR AT A RATE EQUAL TO THE EXHAUST AIR RATE. SUCH MAKEUP AIR SYSTEMS SHALL BE EQUIPPED WITH A MEANS OF CLOSURE AND SHALL BE AUTOMATICALLY CONTROLLED TO START AND OPERATE SIMULTANEOUSLY WITH THE EXHAUST SYSTEM.

DUCT DESIGN: DUCT SYSTEMS SHALL BE INSTALLED IN ACCORDANCE WITH ACCA MANUAL-D.

REGISTERS: REGISTERS, DIFFUSERS AND GRILLES SHALL BE MECHANICALLY FASTENED TO RIGID SUPPORTS OR STRUCTURAL MEMBERS ON AT LEAT TWO OPPOSITE SIDES IN ADDITION TO BEING CONNECTE TO THE DUCTWORK THEY SERVE.

EXHAUST: EXHAUST AIR FROM KITCHENS, BATHROOMS AND TOILET ROOMS SHALL NOT BE RE-CIRCULATED WITHIN A RESIDENCE OR TO ANOTHER DWELLING UNIT, SHALL NOT DISCHARGE INTO AN ATTIC AND/OR CRAWL SPACE AND SHALL BE EXHAUSTED DIRECTLY TO THE OUTDOORS.

HVAC EQUIPMENT: TRANE OR SUBSTITUTE

MARK	EQUIPMENT
HP 1 AH 1	TRANE 5-TON SPLIT HEAT PUMP SYSTEM OUTDOOR: 4TWR7060A1 (2-STAGE) 208/230V; MCA = 41 AMPS; MOCP = 60 AMPS INDOOR: TEM6A0C60H51++TDR (16.25 SEER MATCH) 208/230V; MCA = 9 AMPS; MOCP = 15 AMPS AHRI NO.: 8928974 AIR HANDLER WEIGHT: 174 LBS.
HP 2 AH 2	TRANE 5-TON SPLIT HEAT PUMP SYSTEM OUTDOOR: 4TWR7060A1 (2-STAGE) 208/230V; MCA = 41 AMPS; MOCP = 60 AMPS INDOOR: TEM6A0C60H51++TDR (16.25 SEER MATCH) 208/230V; MCA = 9 AMPS; MOCP = 15 AMPS AHRI NO.: 8928974 AIR HANDLER WEIGHT: 174 LBS.
HP 3 AH 3	TRANE 3-TON SPLIT HEAT PUMP SYSTEM OUTDOOR: 4TWR7036B1 (2-STAGE) 208/230V; MCA = 21 AMPS; MOCP = 35 AMPS INDOOR: TEM6A0C36H31++TDR (17 SEER MATCH) 208/230V; MCA = 5 AMPS; MOCP = 15 AMPS AHRI NO.: 7599443 AIR HANDLER WEIGHT: 144 LBS.

CONTROLS: HONEYWELL PROGRAMMABLE THERMOSTATS

MARK	EQUIPMENT MODEL
T1	TH6220WF2006 (T6-PRO WIFI PROGRAMMABLE)

EXHAUST FANS: PANASONIC WHISPER VALUE

MARK	EQUIPMENT
EF-1	PANASONIC MODEL FV-0510VS1 VENTILATION FAN 50-80-110 CFM, 0.4 SONES AT 0.1" PS* 120V, .13 AMPS (ENERGY STAR RATED) (*@80 CFM)

AIR DISTRIBUTION: PROSELECT OR LIKE

MARK	EQUIPMENT MODEL
SR-1	PS4CW**** CURVED BLADE CEILING REGISTER
RG-1	PSRGW**** STAMPED FACE RETURN AIR GRILLE
JD-1	PSRGW**** STAMPED FACE RETURN AIR GRILLE

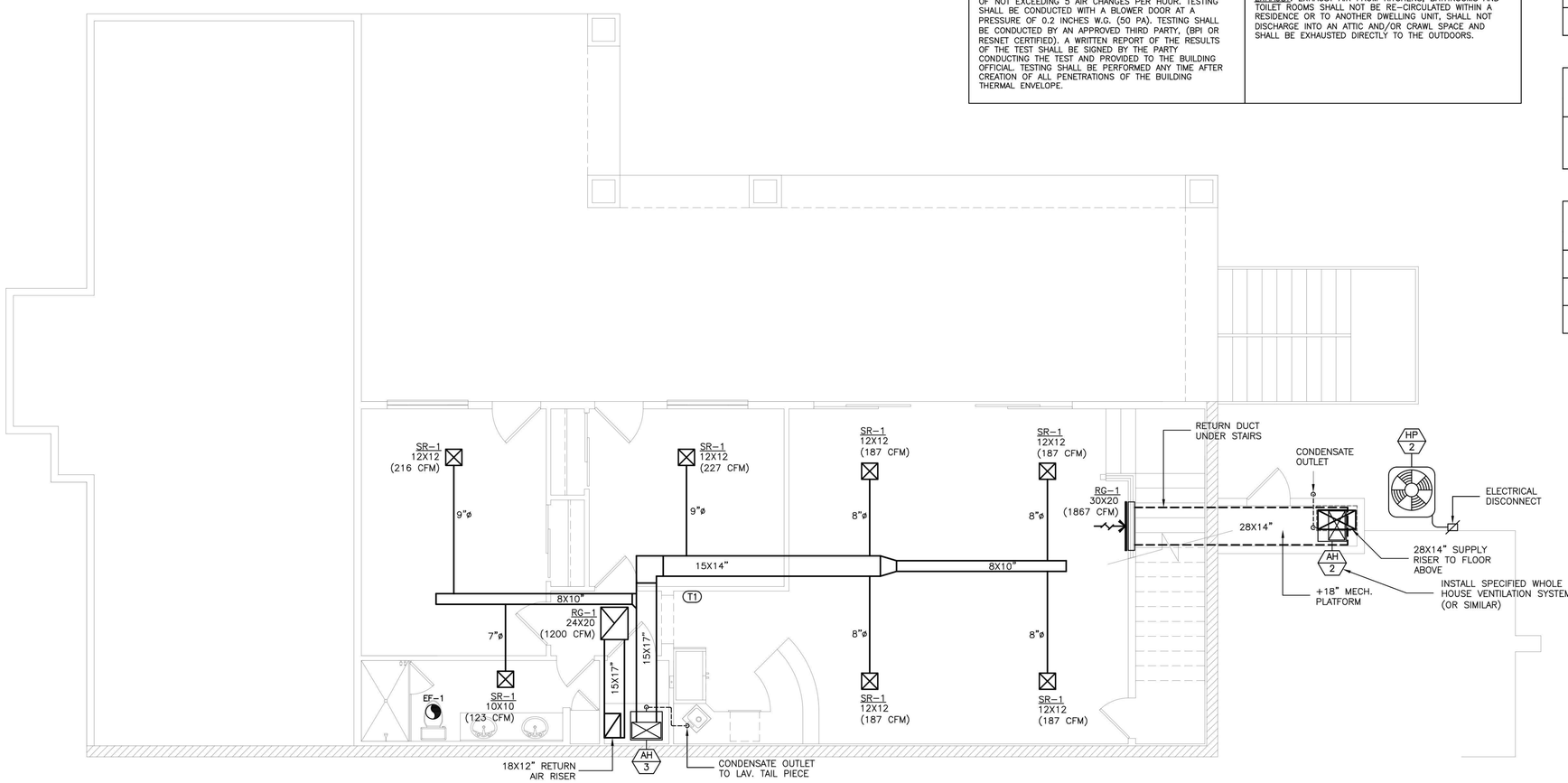

MDS

DRAWN
C. CLINE

DATE
6/7/22

SCALE
1/4"=1'-0"

Mechanical Design Services, LLC
19718 W. AMELIA AVE.
BUCKEYE, AZ 85396
PH: (602) 628-2061 FAX: (623) 322-3779

KASNOFF RESIDENCE

15546 E. TELEGRAPH DR.
FOUNTAIN HILLS, AZ 85268

REVISIONS:
REVISIONS:
REVISIONS:
REVISIONS:
REVISIONS:

APPROVED
07/11/2022

M-1

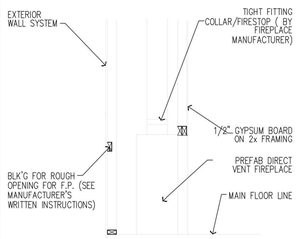

ROOF PENETRATION AT FIREPLACE VENTING (17)

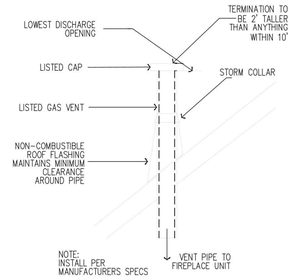

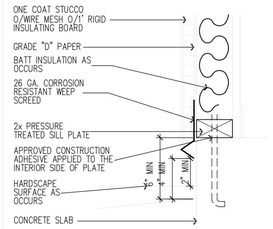

BASE AT EXT. WALL (Stucco) (13)

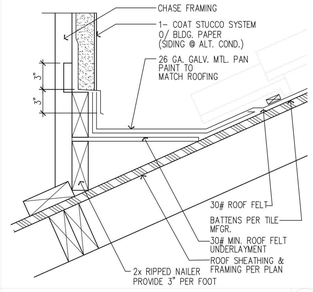

SADDLE (9)

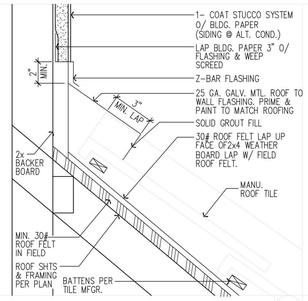

ROOF TO WALL (5)

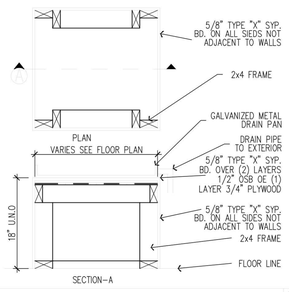

WATER HEATER PLATFORM (1)

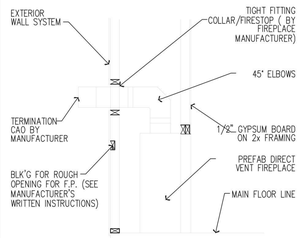

DIRECT VENT FIREPLACE (21)

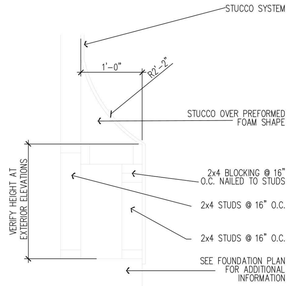

FLARED COLUMN BASE (18)

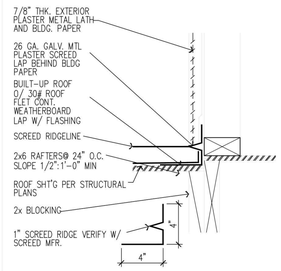

EXT. WALL @ 2ND FLOORS (14)

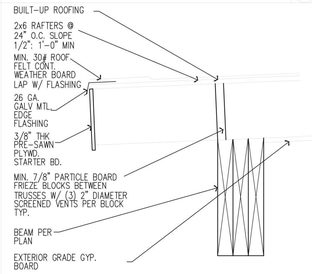

FASCIA (10)

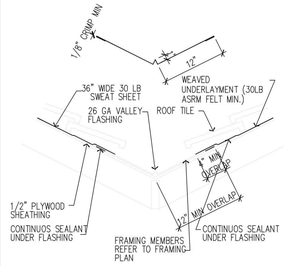

VALLEY FLASHING (6)

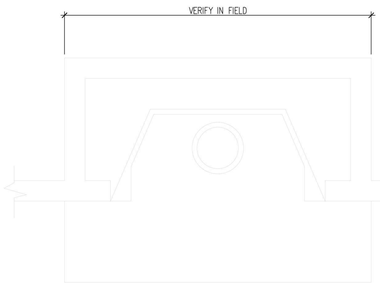

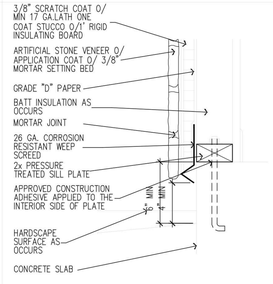

BASE AT EXT. WALL (Stone Veneer) (15)

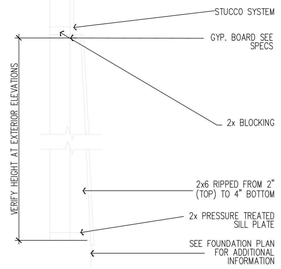

FLARED STUCCO BASE (11)

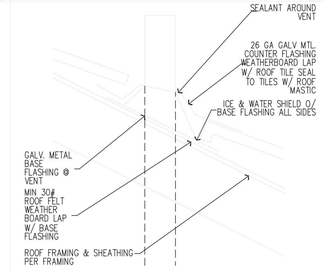

VENT THROUGH ROOF (7)

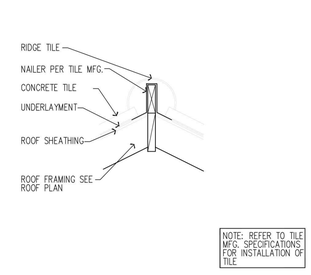

RIDGE/HIP (3)

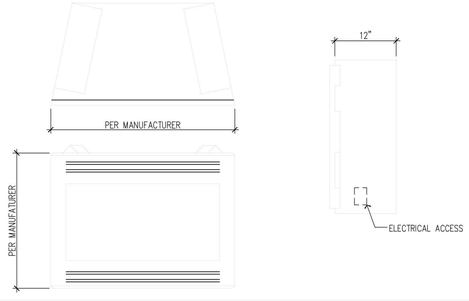

DIRECT VENT FIREPLACE DETAIL (19)

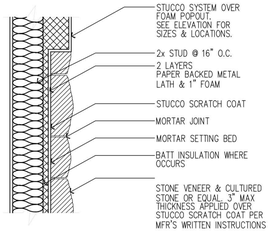

STONE VENEER ATTACH. (16)

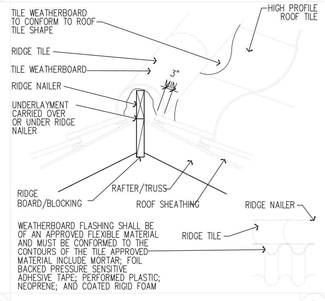

TILE WEATHERBOARD (12)

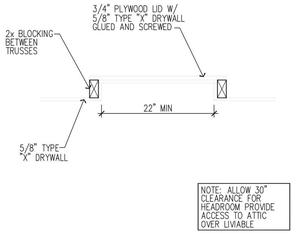

ATTIC ACCESS (4)

brianscottdesign
4127 E. Mesquite St.
Gilbert, AZ 85296
602-999-1690
bromney@brianscottdesign.com

KASNOFF RESIDENCE

15546 E. TELEGRAPH DR.
FOUNTAIN HILLS, AZ.
85268

TITLE: ARCHITECTURAL DETAILS
KASNOFF RESIDENCE

DATE: 8/06/21

APPROVED
07/11/2022

SHEET NUMBER

AD1

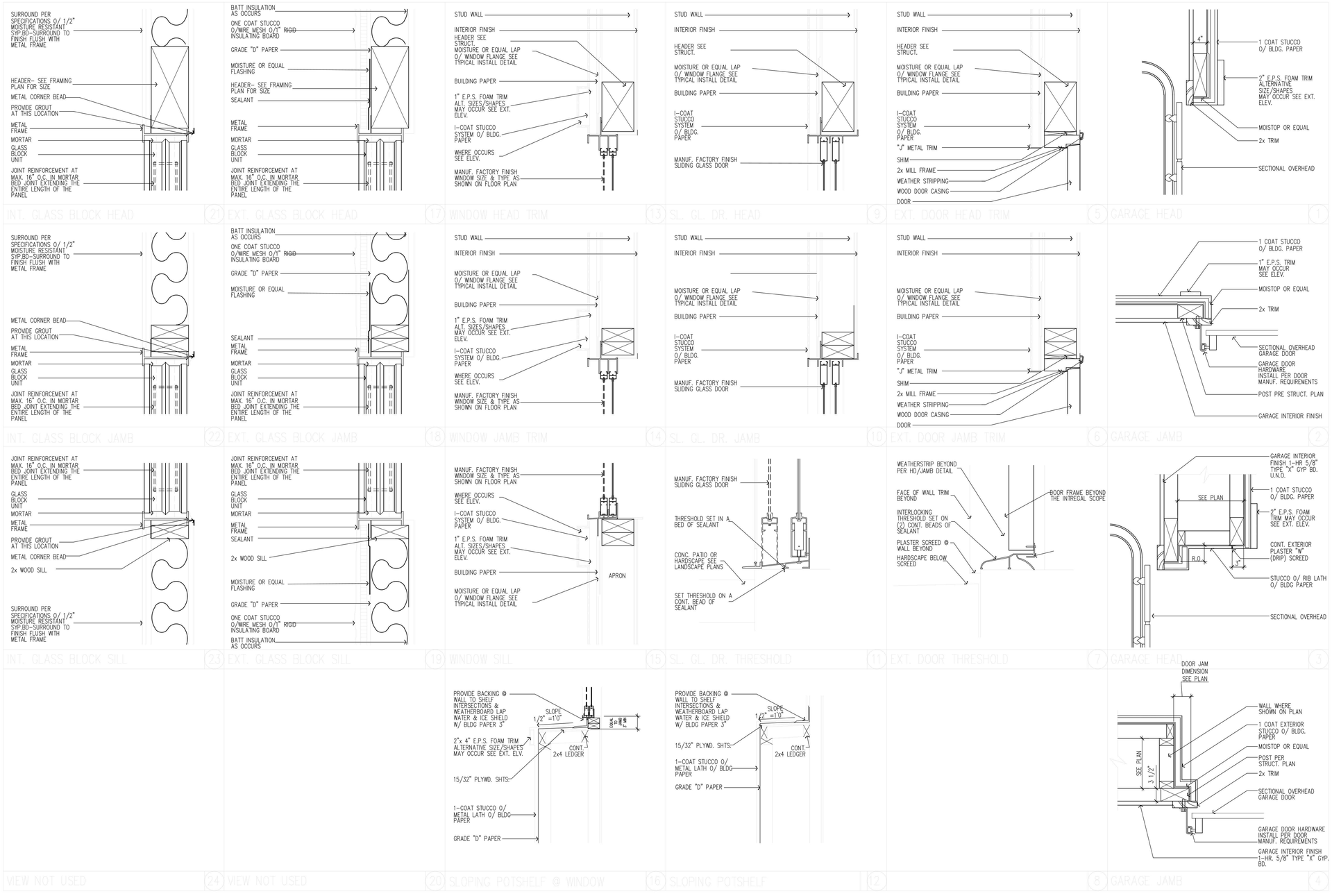

brianscottdesign

4127 E. Mesquite St.
Gilbert, AZ 85296
602-999-1690

bromney@brianscottdesign.com

KASNOFF RESIDENCE

15546 E. TELEGRAPH DR.
FOUNTAIN HILLS, AZ.
85268

TITLE: ARCHITECTURAL DETAILS

KASNOFF RESIDENCE

DATE: 8/06/21

APPROVED
07/11/2022

SHEET NUMBER

AD2

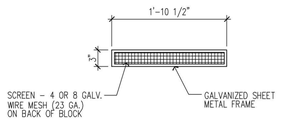

VENT NOTES:
1. SEE VENTILATION CALCULATIONS FOR VENTILATION REQUIREMENTS
2. STOP INSULATION FROM BLOCKING HOLES

SCREEN EAVE VENT (14)

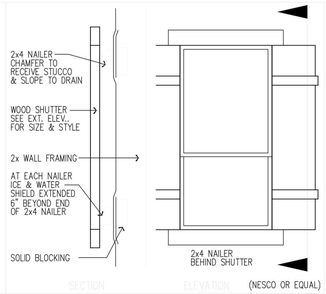

(NESCO OR EQUAL)

SHUTTER (10)

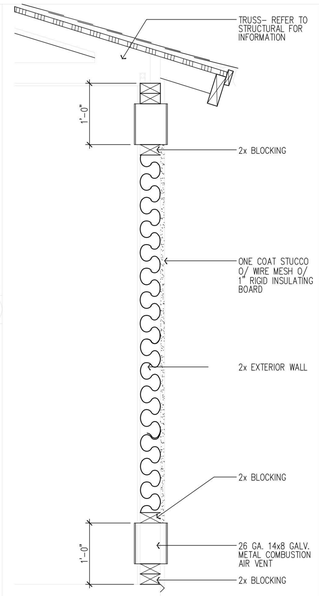

COMBUSTION AIR VENTS (7)

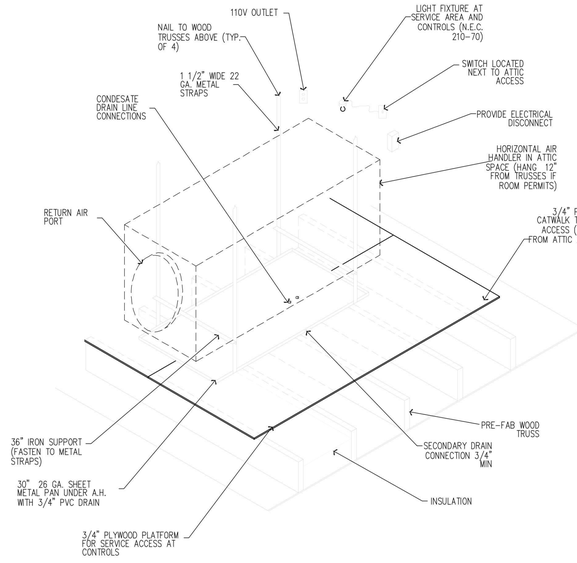

AIR HANDLER IN ATTIC (4)

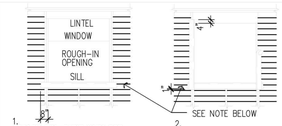

1.
ATTACH SILL STRIP WITH TOP EDGE LEVEL WITH ROUGH SILL EXTENDED BEYOND EDGE OF ROUGH OPENING AT LEAST 8" SECURE ALL MOISTOP (OR EQUAL) WITH GALVANIZED NAILS OR POWER–DRIVEN STAPLES

2.
ATTCH JAMB STRAP WITH SIDE EDGE EVEN WITH ROUGH–JAMB FRAMING START STRIP 1" BELOW LOWER EDGE OF SILL STRIP AND EXTEND 4" ABOVE LOWER EDGE OF LINTEL

NOTE: LINE–WIRE WHEN USED AS BACKING TO SUPPORT PAPER BENEATH WIRE LATH (NETTING) FOR PORTLAND CEMENT PLASTER (STUCCO) SHALL BE INSTALLED AS FOLLOWS.
1. WIRE GAUGE, SPACING, AND ATTACHMENT SHALL BE IN ACCORDANCE WITH REQUIREMENTS OF BUILDING NEWS ITEMS 47–1.
2. PERIPHERAL FLASHING, AT ALL EDGES OF OPENING, MUST COVER THE WIRE BACKING.
3. NO ATTACHMENT DEVICES NOR THE WIRE BACKING SHALL COVER OR PENETRATE THE FLASHING MATERIAL.

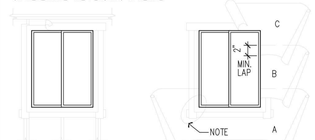

3.
INSTALL WINDOW JAMB NAILING FLANGES OVER A CONTINUOUS BEAD OF SEALANT ON THE MOISTOP (OR EQUAL). INSTALL THE WINDOW HEAD MOISTOP (OR EQUAL) ON A CONTINUOUS BEAD OF SEALANT APPLIED TO THE WINDOW HEAD NAILING FLANGE.

4.
COMMENCING AT THE BOTTOM (SOLE PLATE) OF THE WALL LAY BUILDING PAPER UNDER SILL STRIP

NOTE: CUT ANY EXCESS BUILDING PAPER THAT MAY EXTEND ABOVE THE SILL FLANGE ABOVE EACH SIDE OF (SHOWN AS SHORT DASHED LINES). DO NOT SLICE BUILDING PAPER HORIZONTALLY SO THAT THE PAPER WILL LAP OVER THE JAMB STRIPS INSTALL SUCCESSIVE LINES OF BUILDING PAPER (B,C,D, ECT.) OVER JAMB AND HEAD FLANGES, LAPPING EACH COURSE.

THE ABOVE METHOD APPLIES ONLY TO THE MOISTOP COMMONLY USED TYPE OF METAL FRAME (SURFACE MOUNTED). FOR OTHER TYPES OF FRAMES SPECIAL ATTENTION MUST BE PAID TO THE MANUFACTURERS RECOMMENDATIONS.

TYPICAL MOISTOP INSTALL (1)

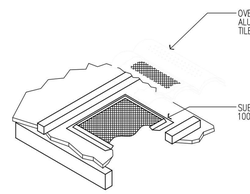

OVERHANG VENTS (15)

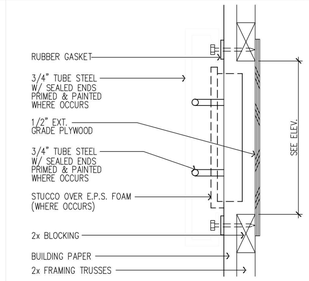

STUCCO RECESS (11)

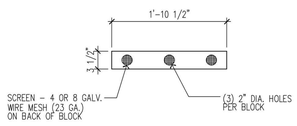

VENT NOTES:
1. 3/4" PARTICLE BOARD BLOCKING PER ENGINEER
2. SCREEN STAPLED TO BACK OF BLOCK
3. SEE VENTILATION CALCULATIONS FOR VENTILATION REQUIREMENTS
4. STOP INSULATION FROM BLOCKING HOLES

BIRD BLOCKING VENTS (16)

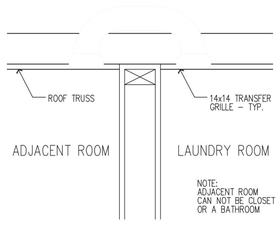

NOTE:
ADJACENT ROOM CAN NOT BE CLOSET OR A BATHROOM

PHOENIX ONLY

LAUNDRY MAKE–UP AIR (12)

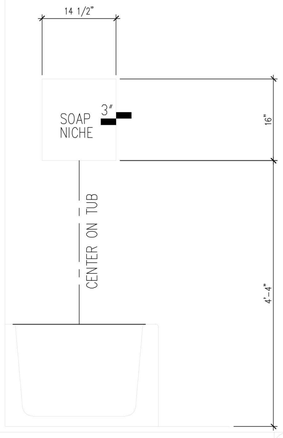

NICHE (9)

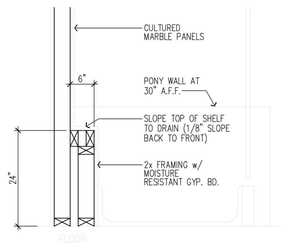

SHOWER SHELF SECTION

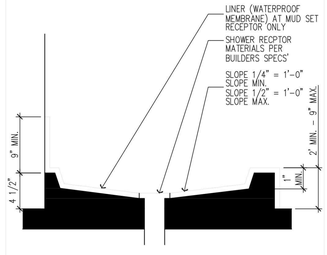

SHOWER DRAIN RECEPTOR (13)

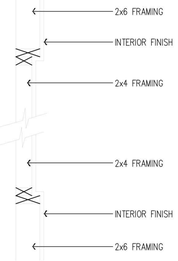

SHOWER NICHE (9)

VIEW NOT USED (17)

brianscottdesign
4127 E. Mesquite St.
Gilbert, AZ 85296
602-999-1690
bromney@brianscottdesign.com

KASNOFF RESIDENCE

15546 E. TELEGRAPH DR.
FOUNTAIN HILLS, AZ.
85268

TITLE:
ARCHITECTURAL DETAILS
KASNOFF RESIDENCE

DATE: 8/06/21

APPROVED
07/11/2022

SHEET NUMBER
AD3

EROSION & SEDIMENT CONTROL PLAN
FOR
KASNOFF RESIDENCE

A SINGLE FAMILY RESIDENCE
at 15546 EAST TELEGRAPH DRIVE

A REPLAT OF BLOCK 2, 3, 8, 9, FINAL MAP 604-C, A SUBDIVISION SITUATED IN SECTION 16 & 21, TOWNSHIP 3 NORTH, RANGE 6 EAST, GILA & SALT RIVER BASE & MERIDIAN, MARICOPA COUNTY, ARIZONA.

LOCATION MAP

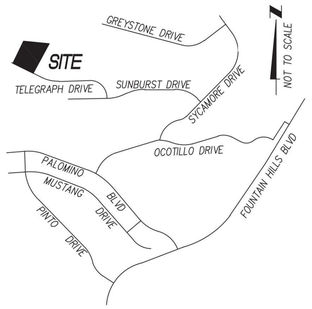

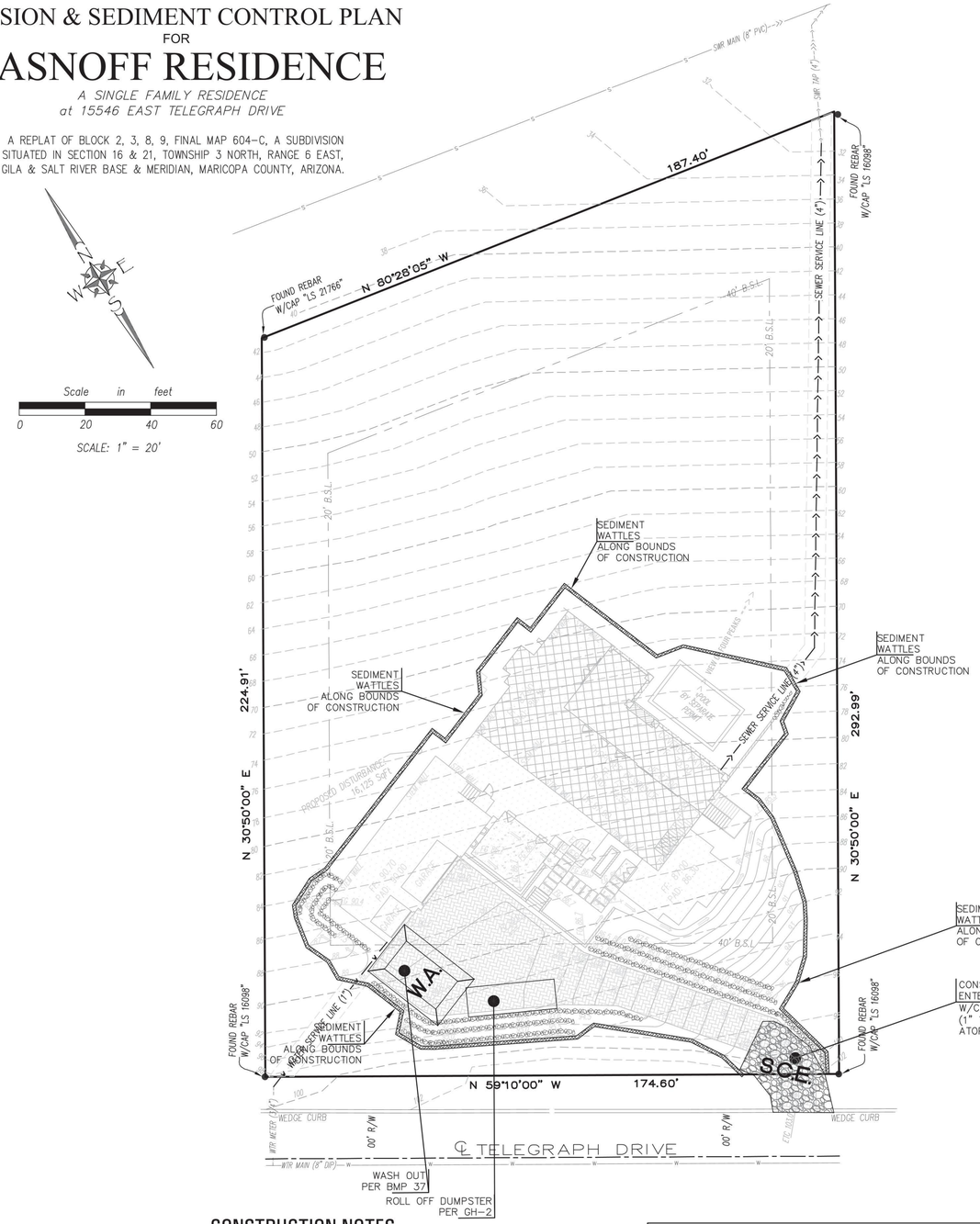

WORK LOG		
DSN	DESCRIPTION	DATE
CBS	FIRST DRAFT – TOWN OF FOUNTAIN HILLS SUBMITTAL	10/18/21
CBS	FINAL DRAFT – TOWN OF FOUNTAIN HILLS SUBMITTAL	05/10/22

OWNER

C/O: GEORGE KASNOFF
TIMOTHY & ELAINE OROURKE
15716 EAST GREYSTONE DRIVE
FOUNTAIN HILLS, AZ 85268

SITE DATA

LEGAL DESCRIPTION:
LOT 10, OF FOUNTAIN HILLS PLAT 604c, BLOCK 2, 3, 9 REPLAT, ACCORDING TO THE PLAT OF RECORD IN THE OFFICE OF THE COUNTY RECORDER OF MARICOPA COUNTY, ARIZONA, RECORDED IN BOOK 292 OF MAPS, PAGE 47.

NET AREA: 45,276 Sq.Ft. (1.04 Ac.)

ADDRESS: 15546 E. TELEGRAPH DRIVE
FOUNTAIN HILLS, ARIZONA 85268

A.P.N.: 176-13-757

ZONING: R1-35

MAX LOT COVERAGE 9,055 SqFt (20%)
**PER TOWN OF FH ZONING ORDINANCE

BUILDING SETBACKS (BSB):
FRONT 40'
SIDE 20'
REAR 40'

PROPOSED LOT DISTURBANCE
BUILDING ENVELOPE 16,125 SqFt (35.6% of LOT)

BUILDING FOOTPRINT:
** REFERENCE BUILDING PLAN SET

EMERGENCY CONTACT

AGENCY	SITUATION	PHONE
ARIZONA DEPARTMENT OF ENVIROMENTAL QUALITY (ADEQ) – EMERGENCY RESPONSE UNIT	EMERGENCY	602-771-2330 800-234-5677
	RUOTINE BUSINESS	602-771-4106 602-771-4155
NATIONAL RESPONSE CENTER	EMERGENCY	800-424-8802
LOCAL FIRE DEPARTMENT/DISTRICT	EMERGENCY	911
OTHER ADEQ CONTACT NUMBERS		
ADEQ FRONT DESK	602-771-2300	
AIR QUALITY DIVISION	602-771-2308	
WASTE PROGRAMS DIVISION	602-771-4209	
POLLUTION PREVENTION/TRI	602-771-4235	
WATER QUALITY DIVISION	602-771-2306	
STROM WATER	602-771-4574	

SHEET INDEX

ESC 1 : EROSION & SEDIMENT CONTROL – COVER SHEET
ESC 2 : EROSION & SEDIMENT CONTROL – DETAIL

EROSION & SEDIMENT CONTROL PLAN GENERAL NOTES

1. IF DEEMED REQUIRED PER ADEQ REQUIREMENTS, A NOTICE OF INTENT (NOI) FOR COVERAGE UNDER THE CONSTRUCTION ACTIVITY GENERAL PERMIT (CGP) SHALL BE SUBMITTED TO ADEQ PRIOR TO COMMENCING LAND DEVELOPMENT OR GRADING ACTIVITIES.

2. CONTRACTOR/OWNER SHALL NOTIFY THE TOWN INSPECTOR 24 HOURS PRIOR TO COMMENCING ANY LAND DEVELOPMENT OR GRADING ACTIVITIES.

3. A COPY OF THE APPROVED GRADING AND DRAINAGE SITE PLAN, NOI APPROVAL NUMBER AND PERMIT, THE ESCP AND THE SWPPP SHALL BE MAINTAINED ON SITE AND AVAILABLE FOR REVIEW BY THE TOWN INSPECTOR, REPRESENTATIVE OR ADEQ.

4. WHEN A NOI IS REQUIRED: THE CONTRACTOR SHALL PREPARE A STORM WATER POLLUTION PREVENTION PLAN (A WRITTEN POLICIES AND PROCEDURES MANUAL IN ACCORDANCE WITH ADEQ) IN CONJUNCTION WITH THE ESCP FOR THE PROJECT. TO BE ACCESSED ON-SITE AT THE REQUEST OF ADEQ.

5. CONTRACTOR/OWNER SHALL POST A SIGN OR OTHER NOTICE NEAR THE MAIN ENTRANCE OF THE CONSTRUCTION SITE WITH THE AZPDES AUTHORIZATION NUMBER FOR THE PROJECT, A COPY OF THE NOI, DESCRIPTION OF THE TYPE OF PROJECT AND THE NAME AND CONTACT INFORMATION.

6. CONTRACTOR/OWNER SHALL AT MINIMUM PERFORM A VISUAL INSPECTION OF THE CONSTRUCTION SITE ONCE EVERY FOURTEEN (14) DAYS. ALSO WITHIN 24 HOURS OF A RAINFALL EVENT GREATER THAN OR EQUAL TO HALF AN INCH. CONTRACTOR/OWNER SHALL PREPARE AN INSPECTION LOG DOCUMENTING FINDINGS. OPERATOR'S REPORT SHALL BE MADE AVAILABLE ONSITE AT THE TOWN'S OR ADEQ'S REQUEST. EROSION CONTROL FACILITIES SHALL BE MAINTAINED OR REPAIRED AS NECESSARY TO ENSURE FUNCTIONALITY THROUGHOUT THE DURATION OF THE COMPLETION OF THE PROJECT.

7. CONTRACTOR/OWNER SHALL MAINTAIN COMPLIANCE WITH ALL REQUIREMENTS OUTLINED IN THE ARIZONA POLLUTANT DISCHARGE ELIMINATION SYSTEM (AZPDES) CONSTRUCTION GENERAL PERMIT ADMINISTERED BY ADEQ.

8. FACILITIES SHOWN ON THIS ESCP MUST BE CONSTRUCTED IN CONJUNCTION WITH ALL CLEARING AND GRADING ACTIVITIES IN SUCH A MANNER AS TO ENSURE THAT SEDIMENT LADEN WATER AND CONSTRUCTION CONTAMINATION DOES NOT ENTER THE DRAINAGE SYSTEM/WASHES OR VIOLATE ADEQ SWPP REQUIREMENTS. BMPS MUST BE INSTALLED AND IN OPERATION PRIOR TO ANY GRADING OR CLEARING AND GRUBBING IS PERFORMED.

9. CONTRACTOR/OWNER SHALL SUBMIT A NOTICE OF TERMINATION (NOT) FOLLOWING COMPLETION OF CONSTRUCTION AND PERMANENT STABILIZATION AS OUTLINED IN THE AZPDES CONSTRUCTION GENERAL PERMIT ADMINISTERED BY ADEQ.

10. CONTRACTOR/OWNER SHALL OBTAIN A DUST CONTROL PERMIT FROM MARICOPA COUNTY AIR QUALITY DEPARTMENT FOR ALL DUST GENERATING ACTIVITIES THAT DISTURB A 0.10 ACRE OR GREATER AND IMPLEMENT ALL APPLICABLE CONTROL MEASURES AS OUTLINED IN MARICOPA COUNTY AIR POLLUTION CONTROL RULE 310.

11. THE CONTRACTOR THAT WILL BE OBTAINING THE GRADING AND DRAINAGE PERMIT MUST HAVE THE NOI PERMIT ISSUED IN THEIR NAME PRIOR TO THE TOWN ISSUING A GRADING PERMIT.

CONSTRUCTION NOTES

BMP NOTES:

S.C.E. — STABLIZED CONSTRUCTION ENTERENCE W/DESINATED WASH OUT AREA PER BMP SPC-5

W.A. — WASH OUT PER BMP 37

SEDIMENT WATTLES
12" STRAW WATTLES BY NORTH AMERICAN GREEN OR EQUAL (TYP)
INSTALL PER MANUFACTER'S SPECIFICATIONS

BASIS OF BEARINGS

THE BASIS OF BEARINGS IS THE CENTER LINE OF TELEGRAPH DRIVE, HAVING A BEARING OF N 59°10'00" W.

BENCHMARK

FOUNTAIN HILLS BM 119: BRASS CAP FLUSH AT THE INTERSECTION OF SUNBURST DRIVE AND TELEGRAPH DRIVE, HAVING AN ELEVATION OF 1833.50 FEET FOUNTAIN HILLS DATUM.

TBM: T/CURB AT SOUTHWEST CORNER OF LOT 10, HAVING AND ELEVATION OF 100 FEET TOWN OF FOUNTAIN HILLS DATUM.

CIVIL ENGINEER
(480) 225-4920 SSEAZ2004@GMAIL.COM
Registered Professional Engineer (Civil) CERTIFICATE NO. 33562 STEVEN J. SEITZ Date Signed 5-10-22 ARIZONA, U.S.A. Expires: 3/31/23

CIVIL ~ STRUCTURAL
S S E
RESIDENTIAL ~ COMMERCIAL
11350 SOUTH VIEWPOINTE WAY
YUMA, ARIZONA 85367

PROJECT MANAGER:
CLINT SCHERF (480) 225-4920

SURVEYOR

MONTGOMERY ENGINEERING & MANAGMENT, LLC
16716 E. PARKVIEW AVE, SUITE 204
FOUNTAIN HILLS, AZ 85268
PH. 480-837-8668

Survey Date: June 2007

Contact Arizona 811 at least two full working days before you begin excavation
ARIZONA 811 Call 811 or click Arizona811.com
APPROVED

Erosion & Sediment Control COVER SHEET

LOT 10, FOUNTAIN HILLS PLAT 604C,
BLOCK 2
FOUNTAIN HILLS, ARIZONA

PROJECT No. SSE-930
SHEET: ESC 01

EROSION & SEDIMENT CONTROL PLAN
BEST MANAGEMENT PRACTICE DETAILS

WORK LOG		
DSN	DESCRIPTION	DATE
CBS	FIRST DRAFT – TOWN OF FOUNTAIN HILLS SUBMITTAL	10/18/21
CBS	FINAL DRAFT – TOWN OF FOUNTAIN HILLS SUBMITTAL	05/10/22

SPC-5 Silt Fence Drawing

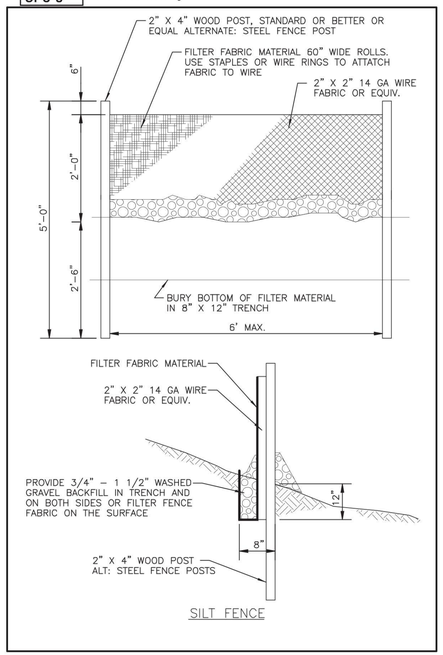

SILT FENCE

SYMBOL	SILT FENCE
—o—S.F.—o—	

DIAGRAM

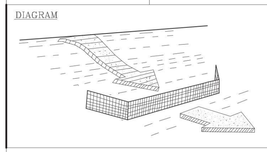

CONDITIONS WHERE PRACTICE APPLIES
- __ PERIMETER CONTROL
- * SLOPE PROTECTION
- * SEDIMENT TRAPPING
- __ DRAINAGEWAY & STREAM PROTECTION
- __ TEMPORARY STABILIZATION
- __ PERMANENT STABILIZATION & EXPOSURE LIMITS
- __ NON-SEDIMENT POLLUTION CONTROL

DEFINITION

A TEMPORARY SEDIMENT BARRIER CONSISTING OF A FILTER FABRIC STRETCHED ACROSS AND ATTACHED TO SUPPORTING POSTS, ENTRENCHED, AND, DEPENDING UPON THE STRENGTH OF THE FABRIC USED, WITH WIRE FENCE FOR SUPPORT.

PURPOSE

1. TO INTERCEPT AND DETAIN SMALL AMOUNTS OF SEDIMENT FROM DISTURBED AREAS DURING CONSTRUCTION OPERATIONS IN ORDER TO PREVENT SEDIMENTF ROM LEAVING THE SITE.
2. TO DECREASE THE VELOCITY OF SHEET FLOWS AND LOW-TO-MODERATE LEVEL CHANNEL FLOWS.

APPROPRIATE APPLICATIONS

FILTER FENCES MUST BE PROVIDED JUST UPSTREAM OF THE POINT(S) OF DISCHARGE OF RUNOFF FROM A SITE, BEFORE THE FLOW BECOMES CONCENTRATED THEY MAY ALSO BE USED:
1. BELOW DISTURBED AREAS WHERE RUNOFF MAY OCCUR IN THE FORM OF SHEET AND RILL EROSION; WHEREVER RUNOFF HAS THE POTENTIAL TO IMPACT DOWNSTREAM RESOURCES.
2. PERPENDICULAR TO MINOR SWALES OR DITCH LINES FOR UP TO ONE ACRE CONTRIBUTING DRAINAGE AREAS.

NOT INTENDED FOR USE IN DETAINING CONCENTRATED FLOWS.

SYNTHETIC FABRIC FILTER FENCES ARE ONLY APPLICABLE FOR SHEET OR OVERLAND FLOWS AND NOT THE VOLUMES OF WATER IN CONCENTRATED FLOWS.

SYMBOL	SILT FENCE
—o—S.F.—o—	

LIMITATIONS

1. FILTER FENCES WILL CREATE A TEMPORARY SEDIMENTATION POND ON THE UPSTREAM SIDE OF THE FENCE WHICH MAY CAUSE TEMPORARY FLOODING. FENCES NOT CONSTRUCTED ON A LEVEL CONTOUR WILL BE OVERTOPPED BY CONCENTRATED FLOW RESULTING IN FAILURE OF THE FILTER FENCE.
2. FILTER FENCES ARE NOT PRACTICAL WHERE LARGE FLOWS OF WATER ARE INVOLVED, HENCE THE NEED TO STRICT THEIR USE TO DRAINAGE AREAS OF ONE ACRE OR LESS, AND FLOW RATES OF LESS THAN 0.5 CFS.
3. PROBLEMS MAY ARISE FROM INCORRECT SELECTION OF PORE SIZE AND/OR IMPROPER INSTALLATION.
4. DO NOT ALLOW WATER DEPTH TO EXCEED 1.5 FEET AT ANY POINT.
5. IMPROPERLY INSTALLED FENCES ARE SUBJECT TO FAILURE FROM UNDERCUTTING, OVERTOPPING, OR COLLAPSING.

PLANNING CONSIDERATIONS

LABORATORY WORK AT THE VIRGINIA HIGHWAY AND TRANSPORTATION RESEARCH COUNCIL HAS SHOWN THAT SILT FENCES CAN TRAP A MUCH HIGHER PERCENTAGE OF SUSPENDED SEDIMENTS THAT CAN STRAW BALES. SILT FENCES ARE PREFERABLE TO STRAW BARRIERS IN MANY CASES. HOWEVER WHILE THE FAILURE RATE OF SILT FENCES IS LOWER THAN THAT OF STRAW BARRIERS, THERE ARE MANY INSTANCES LOCALLY IN WHICH SILT FENCES HAVE BEEN IMPROPERLY INSTALLED. THE INSTALLATION METHODS OUTLINED HERE CAN IMPROVE PERFORMANCE.
1. CONSTRUCT ALONG A LEVEL CONTOUR.
2. SILT FENCES SHOULD REMAIN IN PLACE UNTIL THE DISTURBED AREA IS PERMANENTLY STABILIZED.
3. PROVIDE SUFFICIENT ROOM FOR SEDIMENT REMOVAL EQUIPMENT BETWEEN THE SILT FENCE AND TOES OF SLOPES OR OTHER OBSTRUCTIONS.
4. THE ENDS OF THE FILTER FENCE SHOULD BE TURNED UPHILL TO PREVENT STORMWATER FROM FLOWING AROUND THE FENCE.
5. PROVIDE AN UNDISTURBED OR STABILIZED OUTLET SUITABLE FOR SHEET FLOW.
6. DO NOTCONSTRUCT IN LIVE STREAMS OR INTERMITTENTLY FLOWING CHANNELS.

SYMBOL	SILT FENCE
—o—S.F.—o—	

DESIGN & SIZING CRITERIA

1. UPSTREAM DRAINAGE AREA LIMITED TO 1 ACRE OR LESS WHEN USED ALONE OR IN COMBINATION WITH SEDIMENT BASIN IN A LARGER SITE.
2. MAXIMUM SLOPE STEEPNESS PERPENDICULAR TO FENCE LINE, 1:1. MAXIMUM SHEET OR OVERLAND FLOW PATH LENGTH TO THE FENCE = 100 FEET.
3. NO CONCENTRATED FLOWS GREATER THAN 0.5 CFS.
SELECTION OF A FILTER FABRIC IS BASED ON SOIL CONDITIONS AT THE CONSTRUCTION SITE (WHICH AFFECT THE EQUIVALENT OPENING SIZE (EOS) FABRIC SPECIFICATION) AND CHARACTERISTICS OF THE SUPPORT FENCE(WHICH AFFECT THE CHOICE OF TENSILE STRENGTH). THE DESIGNER SHALL SPECIFY A FILTER FABRIC THAT RETAINS THE SOIL FOUND ON THE CONSTRUCTION SITE YET WILL HAVE OPENINGS LARGE ENOUGH TO PERMIT DRAINAGE AND PREVENT CLOGGING. THE FOLLOWING CRITERIA IS RECOMMENDED FOR SELECTION OF THE EQUIVALENT OPENING SIZE:

1. IF 50 PERCENT OR LESS OF THE SOIL, BY WEIGHT, WILL PASS THE U.S. STANDARD SIEVE NO. 200, SELECT THE EOS TO RETAIN 85 PERCENT OF THE SOIL. THE EOS SHOULD NOT BE FINER THAN EOS 70.
2. FOR ALL OTHER SOIL TYPES, THE EOS SHOULD BE NO LARGER THAN THE OPENINGS IN THE U.S. STANDARD SIEVE NO. 70 [0.0083 IN. (0.21 MM.)] EXCEPT WHERE DIRECT DISCHARGE TO A STREAM, LAKE, OR WETLAND WILL OCCUR, THEN THE EOS SHALL BE NO LARGER THAN STANDARD SIEVE NO. 100.

TO REDUCE THE CHANCE OF CLOGGING, IT IS PREFERABLE TO SPECIFY A FABRIC WITH OPENINGS AS LARGE AS ALLOWED BY THE CRITERIA. NO FABRIC SHOULD BE SPECIFIED WITH AN EOS SMALLER THAN U.S. STANDARD SIEVE NO. 100 [0.0059 IN. (0.15 MM.)]. IF 85 PERCENT OR MORE OF A SOIL, BY WEIGHT, PASSES THROUGH THE OPENINGS IN A NO. 200 SIEVE [0.0029 IN. (0.074 MM.)], FILTER FABRIC SHALL NOT BE USED. MOST OF THE PARTICLES IN SUCH A SOIL WOULD NOT BE RETAINED IF THE EOS WAS TOO LARGE, AND THEY WOULD CLOG THE FABRIC QUICKLY IF THE EOS WAS SMALL ENOUGH TO CAPTURE THE SOIL.

SYMBOL	SILT FENCE
—o—S.F.—o—	

SELECTION OF FABRIC TENSILE STRENGTH AND BURSTING STRENGTH CHARACTERISTICS SHALL BE SUPPORTED WITH WIRE MESH IN AND AS RECOMMENDED BY THE FABRIC MANUFACTURER. FILTER FABRIC MATERIAL SHALL CONTAIN ULTRAVIOLET RAY INHIBITORS AND STABILIZERS TO PROVIDE A MINIMUM OF SIX MONTHS OF EXPECTED USABLE LIFE AT A TEMPERATURE RANGE OF 0° F. TO 120° F.

+ TYPICAL INSTALLATION:

FILTER FENCES ARE TO BE CONSTRUCTED ON A LEVEL CONTOUR TO MAXIMIZE THE AVAILABLE PONDING AREA AND PREVENT CONCENTRATION OF FLOW AGAINST THE FENCE.
A. POSTS SHALL BE SPACED A MAXIMUM OF 6 FEET APART AND DRIVEN SECURELY INTO THE GROUND A MINIMUM OF 30 INCHES.
B. A TRENCH SHALL BE EXCAVATED APPROXIMATELY 8 INCHES WIDE AND 12 INCHES DEEP ALONG THE LINE OF POSTS AND UPSLOPE FROM THE BARRIER.
C. WHEN STANDARD STRENGTH FILTER FABRIC IS USED, A WIRE MESH SUPPORT FENCE SHALL BE FASTENED SECURELY TO THE UPSLOPE SIDE OF THE POSTS USING HEAVY DUTY WIRE STAPLES AT LEAST 1 INCH LONG, TIE WIRES OR HOG RINGS. THE WIRE SHALL EXTEND INTO THE TRENCH A MINIMUM OF 4 INCHES.
D. THE STANDARD STRENGTH FILTER FABRIC SHALL BE STAPLED OR WIRED TO THE FENCE, AND 20 INCHES OF THE FABRIC SHALL EXTEND INTO THE TRENCH. WHEN EXTRA-STRENGTH FILTER FABRIC AND CLOSER POST SPACING ARE USED, THE WIRE MESH SUPPORT FENCE MAY BE ELIMINATED AND THE FILTER FABRIC STAPLED OR WIRED DIRECTLY TO THE POSTS.
E. THE USE OF JOINTS SHOULD BE AVOIDED WHEN JOINTS ARE NECESSARY FILTER CLOTH SHALL BE SPLICED TOGETHER ONLY AT A SUPPORT POST, WITH A MINIMUM 6 INCH OVERLAP AND BOTH ENDS SECURELY FASTENED TO THE POST.
F. THE TRENCH SHALL BE BACKFILLED WITH 3/4-INCH MINIMUM DIAMETER WASHED GRAVEL OR COMPACTEDN-A TIVE MATERIAL.

MAINTENANCE REQUIREMENTS

INSPECT MONTHLY DURING DRY PERIODS AND IMMEDIATELY AFTER EACH RAINFALL. REPAIR AS NECESSARY. SEDIMENT MUST BE REMOVED WHEN IT REACHES APPROXIMATELY ONE THIRD THE HEIGHT OF THE FENCE, ESPECIALLY IF HEAVY RAINS ARE EXPECTED. FILTER FENCES SHOULD NOT BE REMOVED UNTIL THE UPSLOPE AREA HAS BEEN PERMANENTLY STABILIZED.

EC-5 Stabilized Construction Entrance Drawing

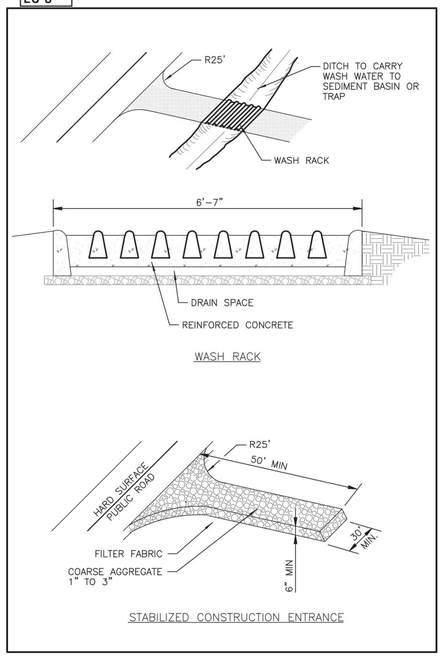

WASH RACK

STABILIZED CONSTRUCTION ENTRANCE

SYMBOL	STABILIZED CONSTRUCTION ENTRANCE

DIAGRAM

CONDITIONS WHERE PRACTICE APPLIES
- __ PERIMETER CONTROL
- * SLOPE PROTECTION
- * SEDIMENT TRAPPING
- __ DRAINAGEWAY & STREAM PROTECTION
- * TEMPORARY STABILIZATION
- __ PERMANENT STABILIZATION & EXPOSURE LIMITS
- * NON-SEDIMENT POLLUTION CONTROL

DEFINITION
A STABILIZED PAD OF AGGREGATE UNDERLAIN WITH FILTER CLOTH LOCATED AT ANY POINT WHERE TRAFFIC WILL BE ENTERING OR LEAVING A CONSTRUCTION SITE TO OR FROM A PUBLIC RIGHT-OF-WAY, STREET, ALLEY, SIDEWALK OR PARKING AREA.

PURPOSE
THE PURPOSE OF A STABILIZED CONSTRUCTION ENTRANCE IS TO REDUCE OR ELIMINATE THE TRACKING OF SEDIMENT ONTO PUBLIC RIGHTS-OF-WAY OR STREETS. REDUCING TRACKOUT OF SEDIMENTS AND OTHER POLLUTANTS ONTO PAVED ROADS HELPS PREVENT DEPOSITION OF SEDIMENTSIN TO LOCAL STORM DRAINS AND PRODUCTION OF AIRBORNE DUST.

APPROPRIATE APPLICATIONS
A STABILIZED CONSTRUCTION ENTRANCE SHOULD BE USED AT ALL POINTS OF CONSTRUCTION INGRESS AND EGRESS. NPDES PERMITS REQUIRE THAT APPROPRIATE MEASURES BE IMPLEMENTED TO PREVENT TRACKOUT OF SEDIMENTS ONTO PAVED ROADWAYS.

LIMITATIONS
THE STABILIZED CONSTRUCTION ENTRANCE PLAN SHOULD BE REVIEWED AS PART OF THE PROJECT TRAFFIC CONTROL PLAN.

–CONSTRUCT ON LEVEL GROUND.
–STABILIZED CONSTRUCTION ENTRANCES ARE RATHER EXPENSIVE TO CONSTRUCT AND WHEN A WASH RACK IS INCLUDED, A SEDIMENT TRAP OF SOME KIND MUST ALSO BE PROVIDED TO COLLECT WASH WATER RUNOFF.

SYMBOL	STABILIZED CONSTRUCTION ENTRANCE

PLANNING CONSIDERATIONS

STABILIZED CONSTRUCTION ENTRANCES ARE NOT VERY EFFECTIVE IN REMOVING SEDIMENT FROM EQUIPMENT LEAVING A CONSTRUCTION SITE. EFFICIENCY IS GREATLY INCREASED, THOUGH WHEN A WASHING RACK IS INCLUDED AS PART OF A STABILIZED CONSTRUCTION ENTRANCE. BUILD ON LEVEL GROUND.

+ ADVANTAGES:

DOES REMOVE SOME SEDIMENT FROM EQUIPMENT AND SERVES TO CHANNEL CONSTRUCTION TRAFFIC IN AND OUT OF THE SITE.

DESIGN & SIZING CONSIDERATIONS

THE AGGREGATE FOR STABILIZED CONSTRUCTION ENTRANCE APRONS SHALL BE 1 TO 3 INCHES IN SIZE, WASHED, WELL-GRADED GRAVEL OR CRUSHED ROCK. THE APRON DIMENSIONS RECOMMENDED ARE 30 FT. X 50 FT. AND 6 INCHES DEEP.
–ENTRANCE MUST BE PROPERLY GRADED TO PREVENT RUNOFF FROM LEAVING THE CONSTRUCTION SITE.
–WHEN WASH AREAS ARE PROVIDED, WASHING SHALL BE DONE ON AN AREA STABILIZED WITH CRUSHED STONE WHICH DRAINS INTO A PROPERLY CONSTRUCTED SEDIMENT TRAP OR BASIN (POND).

MAINTENANCE REQUIREMENTS
–INSPECT MONTHLY AND AFTER EACH RAINFALL.
–REPLACE GRAVEL MAT WHEN SURFACE VOIDS ARE NO LONGER VISIBLE. PERIODIC TOP DRESSING WITH ADDITIONAL STONE WILL BE REQUIRED.
–ALL SEDIMENTS DEPOSITED ON PAVED ROADWAYS MUST BE REMOVED WITHIN 24 HOURS.
–REMOVE GRAVEL AND FILTER FABRIC UPON COMPLETION OF CONSTRUCTION.

SYMBOL	DESIGNATED WASHOUT AREA
W.A.	

DIAGRAM

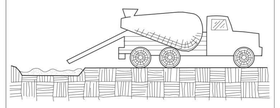

CONDITIONS WHERE PRACTICE APPLIES
- __ PERIMETER CONTROL
- __ SLOPE PROTECTION
- __ SEDIMENT TRAPPING
- __ DRAINAGEWAY & STREAM PROTECTION
- __ TEMPORARY STABILIZATION
- __ PERMANENT STABILIZATION & EXPOSURE LIMITS
- * NON-SEDIMENT POLLUTION CONTROL

DEFINITION

A TEMPORARY PIT OR BERMED AREA FOR WASHOUT OF CONCRETE TRUCKS, TOOLS, MORTAR MIXERS, ETC.

PURPOSE

IMPROPER WASHOUT OF CONCRETE TRUCKS, TOOLS, ETC. MAY ALLOW FRESH CONCRETE OR CEMENT LADEN MORTAR TO ENTER A STORM DRAINAGE SYSTEM.

APPROPRIATE APPLICATIONS

EFFECTIVE WHEN VEHICLES, TOOLS, AND MIXERS CAN BE MOVED TO THE PIT LOCATION. WHERE THIS IS NOT PRACTICAL, TEMPORARY PONDS MAY BE CONSTRUCTED TO ALLOW FOR SETTLING AND HARDENING OF CEMENT AND AGGREGATES. WASHOUT AREA/PITS ARE APPROPRIATE FOR MINOR AMOUNTS OF WASH WATER WHICH RESULT FROM CLEANING OF AGGREGATE MATERIALS OR CONCRETE TRUCKS, TOOLS, ETC.

PLANNING CONSIDERATIONS

1. WASH OUT INTO A SLURRY PIT WHICH WILL LATER BE BACKFILLED. DO THIS ONLY WITH THE APPROVAL OF THE PROPERTY OWNER.
2. WASH OUT INTO A TEMPORARY PIT WHERE THE CONCRETE WASH CAN HARDEN, BE BROKEN UP, AND THEN PROPERLY DISPOSED OF OFF-SITE.

DESIGN & SIZING CRITERIA

1. LOCATE WASH OUT PITS AWAY FROM STORM DRAINS, OPEN DITCHES, OR STORMWATER RECEIVING WATERS.
2. DO NOT WASH OUT CONCRETE TRUCKS INTO-STORM DRAINS, SANITARY SEWERS, STREET GUTTERS, OR STORMWATER CHANNELS.

MAINTENANCE REQUIREMENTS

PROPERLY DISPOSE OF HARDENED CONCRETE PRODUCTS ON A ROUTINE BASIS TO PREVENT THE BUILDUP OF WASTE MATERIALS TO AN UNMANAGEABLE SIZE AND TO MAINTAIN PERCOLATION OF WATER.

SYMBOL	SEDIMENT WATTLES

Typical Fiber Roll/Wattle Sediment Barrier

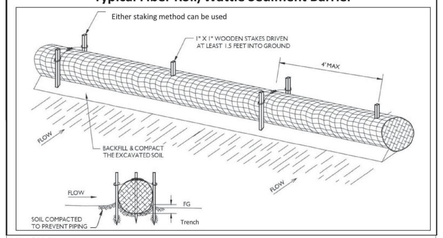

PURPOSE:
STRAW WATTLES OR FIBER ROLLS ARE DESIGNED TO SLOW DOWN RUNOFF, FILTER AND TRAP SEDIMENT BEFORE THE RUNOFF GETS INTO WATERWAYS. STRAW WATTLES ARE POROUS AND ALLOW WATER TO FILTER THROUGH FIBERS AND TRAP SEDIMENT. BECAUSE THEY SLOW RUNOFF THEY REDUCE SHEET AND RILL EROSION.

INSTALLATION:
PREPARE SMOOTH SLOPE BEFORE THE WATTLINGPROCEDURE IS STARTED. SHALLOW GULLIES SHOULD BE SMOOTHED AS WORK PROGRESSES.
DIG SMALL TRENCH ACROSS THE SLOPE ON CONTOUR, TO PLACE ROLLS IN. THE TRENCH SHOULD BE DEEP ENOUGH TO ACCOMMODATE A THIRD TO HALF THE THICKNESS OF THE ROLL. IT IS CRITICAL THAT ROLLS ARE INSTALLED PERPENDICULAR TO WATER MOVEMENT, PARALLEL TO SLOPE CONTOUR. START BUILDING TRENCHES AND INSTALL THE ROLLS FROM THE BOTTOM OF THE SLOPE AND WORK UP.
LAY THE ROLL ALONG THE TRENCHES FITTING IT SNUGLY AGAINST THE SOIL. MAKE SURE NO GAPS EXIST BETWEEN THE SOIL AND THE WATTLE.
USE A STRAIGHT BAR TO DRIVE CLEAN HOLES THROUGH THE ROLL AND INTO THE SOIL. DRIVE THE STAKE THROUGH PREPARED HOLE INTO SOIL. LEAVE ONLY 1 OR 2 INCHES OF STAKE EXPOSED ABOVE ROLL.
INSTALL STAKES AT 4 FEET MAX INTERVALS. EITHER STAKING METHOD SHOWN ABOVE CAN BE USED.
CONSTRUCT AN COMPACTED EARTHEN BERM ALONG THE UPHILL SIDE OF THE ROLL TO FORCE SHEET FLOW INTO THE ROLL AND PREVENT WATER FROM PIPING INTO THE TRENCH.
WHEN MORE THAN ONE ROLL IS PLACED IN A ROW, THE ROLLS SHOULD OVERLAP, ONE IN FRONT OF THE OTHER, BY AT LEAST 1 FOOT AND STAKED SECURELY TO PREVENT PIPING.
WATTLESWITHPLASTICNETTINGNEEDTOBEREMOVEDAFTERTHEWETSEASONHASENDED.

Contact Arizona 811 at least two full working days before you begin excavation
ARIZONA811
Call 811 or click Arizona811.com

CIVIL ENGINEER
(480) 225-4920 SSEAZ2004@GMAIL.COM
Registered Professional Engineer (Civil) CERTIFICATE NO. 33562 STEVEN J. SEITZ Date Signed 5-10-22 ARIZONA, U.S.A. Expires: 3/31/23
PROJECT MANAGER:
CLINT SCHERF (480) 225-4920
CIVIL ~ STRUCTURAL
SSE
RESIDENTIAL ~ COMMERCIAL
11350 SOUTH VIEWPOINTE WAY
YUMA, ARIZONA 85367

Erosion & Sediment Control
DETAIL SHEET

LOT 10, FOUNTAIN HILLS PLAT 604C,
BLOCK 2
FOUNTAIN HILLS, ARIZONA

PROJECT No. SSE-535
SHEET: ESC D2

GRADING & DRAINAGE PLAN
FOR
KASNOFF RESIDENCE

A SINGLE FAMILY RESIDENCE
at 15546 EAST TELEGRAPH DRIVE

A REPLAT OF BLOCK 2, 3, 8, 9, FINAL MAP 604-C, A SUBDIVISION SITUATED IN SECTION 16 & 21, TOWNSHIP 3 NORTH, RANGE 6 EAST, GILA & SALT RIVER BASE & MERIDIAN, MARICOPA COUNTY, ARIZONA.

FHSD CONNECTION AND FINAL INSPECTIONS REQUIRED
SCHEDULE THROUGH ONLINE PORTAL

RETAINING WALL DETAIL

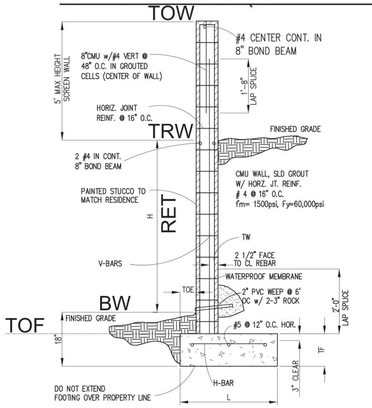

H HEIGHT	TW	V-BAR	L LENGTH	TF	TOE	H-BAR
3'-6"	8"	#4@ 48" oc	2'-0"	8"	8"	-----
5'-6"	8"	#5@ 32" oc	3'-0"	12"	8"	#4@ 32" oc
7'-0"	12"	#5@ 24" oc	4'-0"	12"	8"	#5@ 24" oc
8'-0"	12"	#5@ 16" oc	5'-0"	12"	12"	#5@ 16" oc

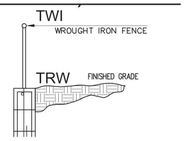

DESIGN NOTES:

WIND ABOVE BACKFILL = 15psf
ALLOW SOIL PRESSURE = 1500psf
FOOTING CONCRETE f'c = 2500psi
FOOTING REBAR Fy = 60,000psi
MASONRY
ASTM C90 GRADE N-1
f'm = 1500psi
GROUT SOLID f'c = 2000psi
TYPE "S" MORTAR, RUNNING BOND
REINFORCING
GR 40 ASTM A615 UNO
CONCRETE
ASTM C-94 2500psi @ 28 DAYS
SOIL
SANDY/GRAVEL, WELL DRAINED
DESIGN IS NOT ALLOWED AT EXPANSIVE SOIL
NOTE:
WALL LENGTHS GREATER THAN 40' SHALL HAVE 1/4" EXPANSION JOINTS AT 20' OC

WALL QUANTITIES

RETAINING WALL: 168 LF
WROUGHT IRON FENCING: __ LF

LOCATION MAP

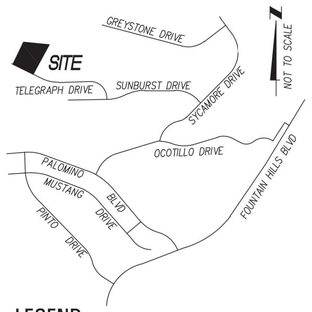

LEGEND

- FOUND REBAR (AS NOTED)
- P.U.E. PUBLIC UTILITIES EASEMENT
- B.S.L. BUILDING SETBACK LINE
- SANITARY MANHOLE
- SANITARY SEWER
- SAGUARO
- PALO VERDE
- OCOTILLO
- BARREL CACTUS

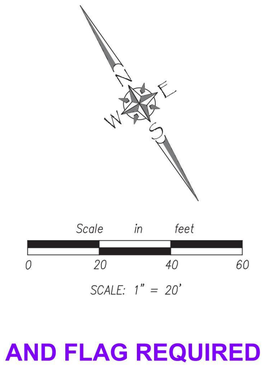

ROPE AND FLAG REQUIRED

LANDSCAPE AND GRADING INSPECTIONS REQUIRED

SITE SECTIONS

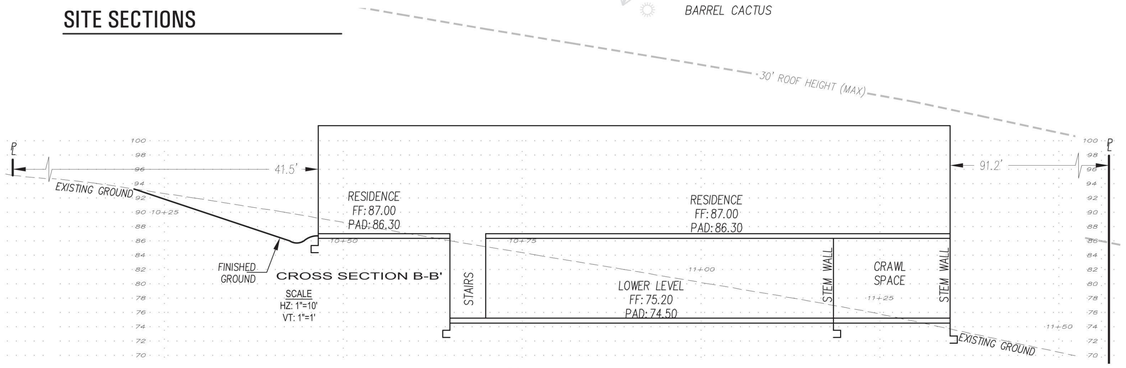

CROSS SECTION B-B'
SCALE
HZ: 1"=10'
VT: 1"=1'

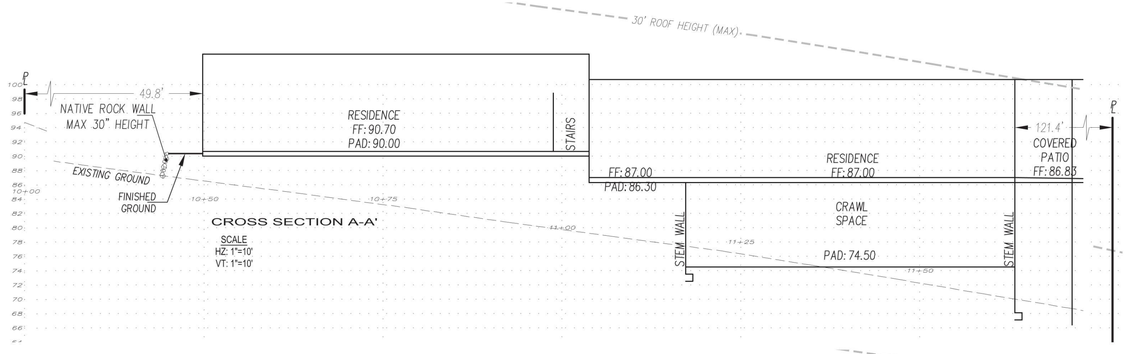

CROSS SECTION A-A'
SCALE
HZ: 1"=10'
VT: 1"=10'

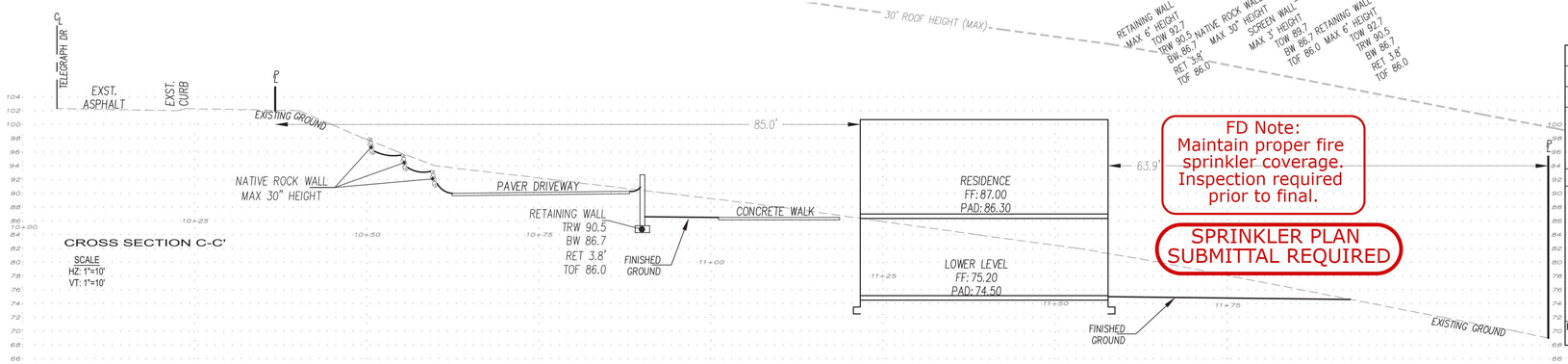

CROSS SECTION C-C'
SCALE
HZ: 1"=10'
VT: 1"=10'

FD Note:
Maintain proper fire sprinkler coverage. Inspection required prior to final.

SPRINKLER PLAN SUBMITTAL REQUIRED

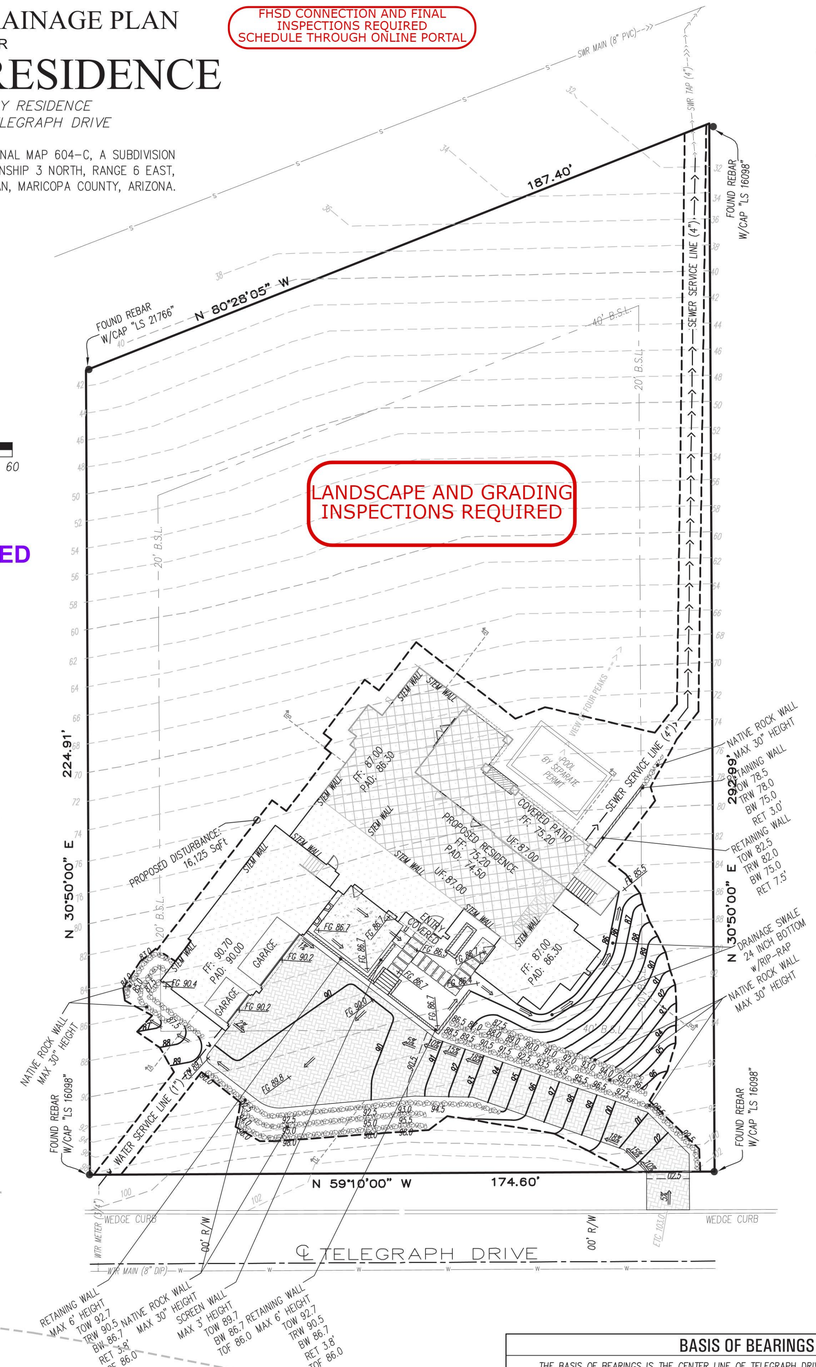

OWNER

C/O: GEORGE KASNOFF
TIMOTHY & ELAINE OROURKE
15716 EAST GREYSTONE DRIVE
FOUNTAIN HILLS, AZ 85268

WORK LOG		
DSN	DESCRIPTION	DATE
CBS	FIRST DRAFT - TOWN OF FOUNTAIN HILLS SUBMITTAL	10/18/21

SITE DATA

LEGAL DESCRIPTION:
LOT 10, OF FOUNTAIN HILLS PLAT 604c, BLOCK 2, 3, 9 REPLAT, ACCORDING TO THE PLAT OF RECORD IN THE OFFICE OF THE COUNTY RECORDER OF MARICOPA COUNTY, ARIZONA, RECORDED IN BOOK 292 OF MAPS, PAGE 47.

NET AREA: 45,276 Sq.Ft. (1.04 Ac.)

ADDRESS: 15546 E. TELEGRAPH DRIVE
FOUNTAIN HILLS, ARIZONA 85268

A.P.N.: 176-13-757

ZONING: R1-35

MAX LOT COVERAGE 9,055 SqFt (20%)
**PER TOWN OF FH ZONING ORDINANCE

BUILDING SETBACKS (BSB):
FRONT 40'
SIDE 20'
REAR 40'

PROPOSED LOT DISTURBANCE
BUILDING ENVELOPE 16,125 SqFt (35.6% of LOT)

BUILDING FOOTPRINT:
** REFERENCE BUILDING PLAN SET

EARTHWORK CALCS:
TOTAL CUT 578
TOTAL FILL 396
NET 182 Cu. Yd. (EXPORT)
*APPROXIMATE TOTALS, NOT FOR BID
-GRADING CONTRACTOR TO VERIFY
-S.S.E. MAKES NO ASSURANCES AS TO THE FINAL EARTHWORK QUANTITIES

ENGINEERING NOTES:

1. TOPOGRAPHIC/BOUNDARY SURVEY WAS DONE BY OTHERS, S.S.E. MAKES NO ASSURANCES TO THE ACCURACY OF CONTOURS, BOUNDARY LOCATIONS, OR EASEMENT LOCATIONS WITHIN SAID SURVEY.

2. THE BUILDING SETBACKS, ENVELOPE AND LOT COVERAGE ARE SHOWN PER THE ZONING DISTRICT. SETBACKS AND OTHER RESTRICTIONS CREATED BY AMENDED STANDARDS OR COVENANTS MAY BE APPLICABLE. FINAL INTERPRETATION IS THE RESPONSIBILITY OF THE OWNER OF SAID PROPERTY AND THE CORRESPONDING GOVERNMENTAL AGENCY OVERSEEING SAID PROPERTY.

3. WATERMAIN AND SEWER LOCATIONS ARE BASED ON INFORMATION PROVIDED BY THE TOWN OF FOUNTAIN HILLS AND MONUMENTS FOUND IN THE FIELD MAY NOT BE EXACT. CONTRACTOR TO VERIFY ACTUAL SIZES, LOCATIONS AND TYPES OF ALL UTILITIES PRIOR TO CONSTRUCTION.

4. CONTRACTOR TO ENSURE POSITIVE DRAINAGE FROM BUILDING FOUNDATION TO PROPERTY LINE, NOTIFY ENGINEER OF ANY DISCREPANCIES.

5. ALL COMPACTION, EXCAVATION AND BACK FILL SHALL BE DONE IN ACCORDANCE WITH GEOTECHNICAL REPORT OR AT MINIMUM A 95% COMPACTION RATE IS REQUIRES PER ASTM D698.

6. UNDERGROUND DRAINAGE SYSTEM, IF ANY, ARE TO BE MAINTAINED BY OWNER, INCLUDING MAINTENANCE AND CLEANING. PERIODIC MAINTENANCE WILL KEEP SYSTEM OPERATING PROPERLY.

7. POOL AND SPA BUILDING PERMIT TO BE OBTAINED BY OTHERS, AND DESIGN SPECS ARE NOT PART OF THIS PLAN. LOCATION OF SAID FACILITIES ON THIS PLAN ARE APPROXIMATIONS, AND ARE NOT FOR CONSTRUCTION.

GRADING & DRAINAGE NOTES

1. CERTIFICATION OF FINISH FLOORS OR BUILDING PADS IS THE RESPONSIBILITY OF THE DEVELOPER, BUILDER, OWNER AND SHALL BE SUBMITTED PRIOR TO A REQUEST FOR CERTIFICATION OF OCCUPANCY OR FINAL INSPECTION.

2. AN APPROVED GRADING AND DRAINAGE PLAN SHALL BE ON THE JOB SITE AT ALL TIMES. DEVIATIONS FROM THE PLAN MUST BE PRECEDED BY AN APPROVED PLAN REVISION.

3. ALL DRAINAGE PROTECTIVE DEVICES SUCH AS SWALES, PIPES, PROTECTIVE BERMS OR OTHER MEASURES DESIGNED TO PROTECT BUILDINGS OR PROPERTY FROM STORM RUNOFF MUST BE COMPLETED PRIOR TO ANY STRUCTURE BEING BUILT.

4. SOIL COMPACTION TEST RESULTS MUST BE SUBMITTED TO THE TOWN ENGINEER'S OFFICE FOR BUILDING PADS THAT HAVE TWO (2) OR MORE FEET OF MATERIAL INDICATED. THIS INFORMATION SHALL BE SUPPLIED PRIOR TO POURING FOUNDATIONS. MINIMUM 95% COMPACTION PER ASTM D698.

5. PREPARATION OF GROUND: THE AREA OVER WHICH FILLS ARE TO BE MADE SHALL BE CLEARED OF ALL TRASH, TREES, STUMPS, DEBRIS OR OTHER MATERIAL NOT SUITABLE AS A FOUNDATION FOR FILL.

6. LOCATIONS OF ALL UTILITIES SHOWN ON THIS PLAN ARE BASED ON INFORMATION SUPPLIED TO THE ENGINEER BY THE APPROPRIATE UTILITY COMPANIES. NO GUARANTEE ON LOCATIONS OR ACCURACY IS IMPLIED OR GIVEN. IT IS THE RESPONSIBILITY OF THE CONTRACTOR TO CONTACT BLUE STAKE (263-1100) AND ANY OTHER INVOLVED AGENCIES TO LOCATE ALL UTILITIES PRIOR TO CONSTRUCTION.

7. RETAINING WALLS SHALL BE BACKFILLED WITH 2" TO 3" STONE WITH 2" DRAINS 6' ON CENTER.

8. DISTURBED AREAS SHALL BE REPLANTED WITH DESERT PLANTS OR DROUGHT-RESISTANT PLANTS. EXISTING VEGETATION SHALL BE RELOCATED IF DISTURBED BY CONSTRUCTION.

9. ALL EXPOSED RETAINING WALLS AND FENCES SHALL BE FINISHED WITH PAINTED STUCCO.

10. CONTRACTOR/BUILDER SHALL NOTIFY THE ENGINEER OF ANY VARIANCES BETWEEN THESE PLANS AND ON-SITE CONDITIONS.

11. ALL DRAINAGE SWALES SHALL BE MAINTAINED BY OWNER TO BE FREE OF TRASH, SILT, VEGETATION AND DEBRIS.

12. CONTRACTOR SHALL VERIFY PROPERTY LINE LOCATIONS PRIOR TO PROCEEDING WITH WORK.

13. ARCHITECTURAL, STRUCTURAL, ELECTRICAL, MECHANICAL AND PLUMBING ARE NOT A PART OF THIS SITE PLAN.

14. LOCATIONS OF ANY VEGETATION NOTED ARE APPROXIMATE AND SHOULD NOT BE USED FOR LANDSCAPE ARCHITECTURAL PLANNING.

15. SWALES SHALL BE LINED WITH 4" MINIMUM ROCK AND BE A MINIMUM OF 14" DEEP AFTER FINISH LANDSCAPING.

16. FINISH GRADE SHALL SLOPE AWAY FROM RESIDENCE AT 5% FOR A MINIMUM DISTANCE OF 10' TO AN APPROVED WATER DISPOSAL AREA.

17. SWIMMING POOLS, SPAS, FENCES, AND SITE WALLS REQUIRE SEPARATE PERMITS.

18. MITIGATION OF EXPANSIVE SOIL IS NOT A PART OF THIS PLAN. SEE HOUSE PLANS FOR REQUIREMENTS.

19. CONTRACTOR SHALL PROVIDE 1" MINIMUM WATER SERVICE.

20. CONCRETE WALKING SURFACES 30" ABOVE GRADE REQUIRE A GUARDRAIL.

BASIS OF BEARINGS

THE BASIS OF BEARINGS IS THE CENTER LINE OF TELEGRAPH DRIVE, HAVING A BEARING OF N 59°10'00" W.

BENCHMARK

FOUNTAIN HILLS BM 119: BRASS CAP FLUSH AT THE INTERSECTION OF SUNBURST DRIVE AND TELEGRAPH DRIVE, HAVING AN ELEVATION OF 1833.50 FEET FOUNTAIN HILLS DATUM.

TBM: T/CURB AT SOUTHWEST CORNER OF LOT 10, HAVING AND ELEVATION OF 100 FEET TOWN OF FOUNTAIN HILLS DATUM.

CIVIL ENGINEER
(480) 225-4920 SSEAZ2004@GMAIL.COM
Registered Professional Engineer (Civil) CERTIFICATE NO. 33562 STEVEN J. SEITZ Date Signed 10-18-21 ARIZONA, U.S.A. Expires: 3/31/23

CIVIL ~ STRUCTURAL
S S E
RESIDENTIAL ~ COMMERCIAL
11350 SOUTH VIEWPOINTE WAY
YUMA, ARIZONA 85367

PROJECT MANAGER:
CLINT SCHERF (480) 225-4920

SURVEYOR

MONTGOMERY ENGINEERING & MANAGMENT, LLC
16716 E. PARKVIEW AVE, SUITE 204
FOUNTAIN HILLS, AZ 85268
PH. 480-837-8668

Survey Date: June 2007

Contact Arizona 811 at least two full working days before you begin excavation
ARIZONA 811 BLUE STAKE, INC.
Call 811 or click Arizona811.com

APPROVED

Grading & Drainage Plan

LOT 10, FOUNTAIN HILLS PLAT 604C,
BLOCK 2
FOUNTAIN HILLS, ARIZONA

PROJECT No. SSE-636
SHEET: GD 01

STRUCTURAL NOTES

IN ACCORDANCE WITH INTERNATIONAL RESIDENTIAL CODE 2018

GENERAL :

WHERE SPECIFIC INSTRUCTIONS IN THESE SPEC'S REQUIRE THAT A PARTICULAR PRODUCT AND/OR MATERIAL(S) BE INSTALLED AND/OR APPLIED BY AN APPROVED APPLICATOR OF THE MANUFACTURER, IT SHALL BE THE SUBCONTRACTOR'S RESPONSIBILITY TO ENSURE THE WORK BE DONE BY AN APPROVED APPLICATOR.

NOTES AND DETAILS ON DRAWINGS SHALL TAKE PRECEDENCE OVER GENERAL STRUCTURAL NOTES AND TYPICAL DETAILS UNLESS GENERAL STRUCTURAL NOTES ARE MORE STRINGENT. WHERE NO DETAILS ARE SHOWN, CONSTRUCTION SHALL CONFORM TO SIMILAR WORK ON THE PROJECT.

WRITTEN DIMENSIONS ON THESE DRAWINGS SHALL HAVE PRECEDENCE OVER SCALED DIMENSIONS. CONTRACTORS SHALL VERIFY AND BE RESPONSIBLE FOR ALL DIMENSIONS AND CONDITIONS ON THE JOB AND SHALL NOTIFY THIS OFFICE OF ANY VARIATIONS FROM THE DIMENSIONS OR CONDITIONS SHOWN ON THE DRAWINGS.

TYPICAL DETAILS MAY NOT NECESSARILY BE PUT ON THE PLANS, BUT APPLY UNLESS NOTED OTHERWISE.

CONSTRUCTION MATERIALS SHALL BE SPREAD OUT IF PLACED ON FRAMED CONSTRUCTION. LOAD SHALL NOT EXCEED THE DESIGN LIVE LOAD PER SQUARE FOOT.

WHERE ANY DISCREPANCIES OCCUR BETWEEN PLANS, DETAILS, GENERAL STRUCTURAL NOTES, SPECIFICATIONS AND ALL APPLICABLE CODES, THE MOST STRINGENT REQUIREMENTS SHALL GOVERN. THIS OFFICE MUST BE NOTIFIED IN WRITING OF ANY DISCREPANCIES PRIOR TO CONSTRUCTION.

ANY STRUCTURAL DESIGN PROVIDED BY OTHERS AND SUBMITTED FOR REVIEW, SHALL BEAR THE SEAL OF AN ENGINEER REGISTERED IN THE STATE OF THE PROPOSED CONSTRUCTION.

ALL PRODUCTS LISTED BY I.C.C./N.E.R. NUMBER(S) SHALL BE INSTALLED PER THE REPORT AND MANUFACTURER'S WRITTEN INSTRUCTIONS. PRODUCT SUBSTITUTION(S) FOR PRODUCT(S) LISTED SHALL ALSO HAVE I.C.C. APPROVED EVALUATION REPORT(S) OR BE APPROVED AND LISTED BY OTHER NATIONALLY RECOGNIZED TESTING AGENCIES.

THE CONSTRUCTION DOCUMENTS AND SPECIFICATIONS REPRESENT THE FINISHED STRUCTURE. THEY DO NOT INDICATE THE METHOD OF CONSTRUCTION. THE CONTRACTOR SHALL PROVIDE ALL MEASURES NECESSARY TO PROTECT THE STRUCTURE DURING CONSTRUCTION. SUCH MEASURES WILL INCLUDE, BUT NOT BE LIMITED TO BRACING AND SHORING. THE PROJECT ARCHITECT OR THE STRUCTURAL ENGINEER SHALL NOT INCLUDE INSPECTION OF THE ABOVE ITEMS OR METHODS, TECHNIQUES, SEQUENCES OR PROCEDURES OF CONSTRUCTION, OR THE SAFETY PRECAUTIONS AND PROGRAMS RELATING THERETO.

DESIGN LOADS :

ROOF LIVE LOAD = 20 P.S.F. AT 'FLAT' ROOFS, 20 P.S.F. AT PITCHED ROOFS
ROOF DEAD LOAD = 15 P.S.F. AT 'FLAT' ROOFS, 20 P.S.F. AT PITCHED ROOFS
FLOOR LIVE LOAD = 40 P.S.F.
FLOOR DEAD LOAD = 15 P.S.F.

WIND LOAD = V_{ULT} 115 mph, EXPOSURE C

SEISMIC DESIGN CATEGORY C (I.R.C. TABLE R301.2.2.1.1)

SITE WORK :

FINISH GRADE SHALL SLOPE 5% FOR A DISTANCE OF 10 FEET TO AN APPROVED WATER DISPOSAL AREA.

FOUNDATIONS :

FOUNDATIONS HAVE BEEN DESIGNED IN ACCORDANCE WITH THE MINIMUM RECOMMENDATIONS STATED IN THE ABOVE MENTIONED BUILDING CODE. ALLOWABLE BEARING PRESSURE ASSUMED TO BE 1,500 P.S.F. AT 18" BELOW UNDISTURBED SOIL.

ALL RECOMMENDATIONS IN THE GEO-TECHNICAL REPORT (IF APPLICABLE) TAKE PRECEDENCE OVER ANY AND ALL GENERAL STRUCTURAL NOTES CONTAINED HEREIN.

PRIOR TO ANY BACK FILLING, ALL BASEMENT OR FOUNDATION WALLS ARE TO BE ADEQUATELY BRACED SO AS TO PREVENT EXCESSIVE PRESSURES DURING CONSTRUCTION, BACK FILLING AND COMPACTION. ALL BRACING TO REMAIN IN POSITION UNTIL MASONRY AND/OR CONCRETE REACHES FULL DESIGN STRENGTH.

REINFORCED CONCRETE :

(THESE NOTES DO NOT APPLY TO POST TENSION OR PRE-STRESSED CONCRETE) DESIGNS BASED ON 2500 P.S.I., HOWEVER, MIX DESIGNED AS FOLLOWS:

MINIMUM 28 DAY CONCRETE COMPRESSIVE STRENGTH:
FOUNDATIONS = 3,000 P.S.I., TYPE II CONCRETE
WALKS, DRIVES AND EXTERIOR SLABS = 3,000 P.S.I.
MAXIMUM SLUMP = 4½"

ALL PROCEDURES, PLACEMENT, FORM WORK, LAP ETC. TO CONFORM WITH LATEST A.C.I. STANDARDS. MECHANICALLY VIBRATE ALL CONCRETE WHEN PLACED, EXCEPT THE SLABS ON GRADE NEED TO BE VIBRATED ONLY AROUND UNDER-FLOOR DUCTS, ETC.

ALL CONCRETE SLABS ON GRADE SHALL BE BOUNDED BY CONSTRUCTION JOINTS (KEYED OR SAW CUT) SUCH THAT THE ENCLOSED AREA DOES NOT EXCEED 400 SQUARE FEET. KEYED CONSTRUCTION JOINTS NEED ONLY OCCUR AT EXPOSED EDGES DURING POURING. ALL OTHER JOINTS MAY BE SAW CUT OR MAY USE "ZIP-STRIPS".

REINFORCEMENT :

ASTM A615 (Fy = 60,000 P.S.I.) LATEST ACI CODE AND DETAILING MANUAL APPLY.

UNLESS NOTED OTHERWISE ON THE DRAWINGS, THE CLEAR CONCRETE COVER PROVIDED FOR REINFORCEMENT SHALL BE :
CAST AGAINST AND PERMANENTLY EXPOSED TO EARTH :3"

EXPOSED TO EARTH OR WEATHER:
(1) NO. 6 AND LARGER :2"
(2) NO. 5 AND SMALLER :1½"

NOT EXPOSED TO WEATHER OR IN CONTACT WITH
THE GROUND (SLABS & WALLS) :¾"

BEAMS, GIRDERS, COLUMNS, PRIMARY REINFORCEMENT
TIES STIRRUPS, SPIRALS :1½"

UNLESS NOTED OTHERWISE, LAP SPLICES IN CONCRETE SHALL BE CLASS "B" TENSION LAP SPLICES 40 BAR DIAMETER MINIMUM. STAGGER ALTERNATE SPLICES A MINIMUM OF ONE LAP LENGTH. ALL SPLICE LOCATIONS SUBJECT TO APPROVAL. PROVIDE BENT CORNER BARS TO MATCH AND LAP WITH HORIZONTAL BARS AT CORNERS AND INTERSECTIONS OF FOOTINGS AND WALLS. REINFORCING BAR SPACING GIVEN ARE MAXIMUM ON VERTICAL REINFORCING TO FOUNDATION. SECURELY TIE ALL BARS IN LOCATION BEFORE PLACING CONCRETE.

MASONRY VENEER SHALL BE ANCHORED WITH A MINIMUM OF ONE 22 GA. GALVANIZED METAL ANCHOR FOR EACH TWO SQUARE FEET OF WALL AREA.

STRUCTURAL STEEL :

ALL STRUCTURAL STEEL SHALL BE ASTM A992 (Fy = 50 KSI). ALL CHANNELS, ANGLES, AND PLATES SHALL BE ASTM A36 (Fy = 36 KSI). ALL TUBE STEEL SHALL BE ASTM A500 (Fy = 46 KSI). ALL BOLTS SHALL BE ASTM A307, UNLESS NOTED OTHERWISE. ALL CONSTRUCTION PER LATEST AISC HANDBOOK. ALL EXPANSION AND EPOXY BOLTS TO HAVE ICC RATING FOR MATERIAL INTO WHICH INSTALLATION TAKES PLACE. ALL BOLTS, ANCHOR BOLTS, EXPANSION BOLTS, ETC. SHALL BE INSTALLED WITH STEEL WASHERS AT SLOTTED HOLES IN STEEL SECTIONS. ALL WELDS SHALL BE PERFORMED BY WELDERS HOLDING VALID CERTIFICATES AND HAVING CURRENT EXPERIENCE IN THE TYPE OF WELD SHOWN ON THE DRAWING OR NOTES. CERTIFICATES SHALL THOSE ISSUED BY AN ACCEPTED TESTING AGENCY. ALL WELDING DONE BY E70 SERIES LOW HYDROGEN RODS UNLESS NOTED OTHERWISE. FOR GRADE 60 REINFORCING BARS, USE E90 SERIES. ALL WELDING PER LATEST AMERICAN WELDING SOCIETY STANDARDS, (EXCEPT STEEL JOISTS SHALL COMPLY WITH SJI STANDARDS). THESE DRAWINGS DO NOT DISTINGUISH BETWEEN SHOP AND FIELD WELDS, THE CONTRACTOR MAY SHOP WELD OR FIELD WELD AT HIS/HER DISCRETION. SHOP WELDS AND FIELD WELDS SHALL BE SHOWN ON THE SHOP DRAWINGS SUBMITTED FOR REVIEW. WHEN STRUCTURAL STEEL IS FURNISHED TO A SPECIFIED MINMIMUM YIELD POINT GREATER THAN 36 KSI, THE ASTM OR OTHER SPECIFICATION DESIGNATION SHALL BE INCLUDED NEAR THE ERECTION MARK ON EACH SHIPPING ASSEMBLY OR IMPORTANT CONSTRUCTION COMPONENT, OVER ANY SHOP COAT OF PAINT, PRIOR TO SHIPMENT FROM FABRICATOR'S PLANT.

STRUCTURAL LUMBER :

THE WESTERN WOOD PRODUCTS ASSOCIATION OR WEST COAST LUMBER INSPECTION GRADING (MUST COMPLY WITH LATEST ADOPTED N.D.S. STANDARDS)

FRAMING LUMBER SHALL COMPLY WITH THE LATEST EDITION OF THE GRADING RULES OF SAWN LUMBER.

FRAMING LUMBER SHALL COMPLY WITH THE LATEST EDITION OF THE GRADING RULES OF AGENCY. ALL LUMBER SHALL BEAR AN APPROVED GRADING STAMP.

JOISTS AND HEADERS :

ALL STRUCTURAL FRAMING MEMBERS SHALL BE DFL-2 OR BETTER WITH THE FOLLOWING MINIMUM VALUES, UNLESS OTHERWISE NOTED:

Fb = 875 P.S.I.
Ft (PARALLEL TO GRAIN) = 575 P.S.I.
Fc (PERP. TO GRAIN) = 625 P.S.I.
Fc (PARALLEL TO GRAIN) = 1300 P.S.I.
Fv = 95 P.S.I.
E = 1,600,000 P.S.I.

TIMBERS :

ALL STRUCTURAL FRAMING MEMBERS SHALL BE DFL-1 OR BETTER WITH THE FOLLOWING MINIMUM VALUES, UNLESS OTHERWISE NOTED:

Fb = 1200 P.S.I.
Ft (PARALLEL TO GRAIN) = 825 P.S.I.
Fc (PERP. TO GRAIN) = 625 P.S.I.
Fc (PARALLEL TO GRAIN) = 1000 P.S.I.
Fv = 85 P.S.I.
E = 1,600,000 P.S.I.

STUDS AND POSTS :

ALL STUDS & POSTS SHALL HAVE THE FOLLOWING MINIMUM PROPERTIES:

MEMBER	E psi (MIN.)	SPECIES AND GRADE
POSTS 4x4, 4x6	1,600,000	DFL-2
POSTS 6x6, 6x8	1,600,000	DFL-1
STUDS 2x4, 3x4, 2x6	1,200,000	HEM-FIR-2 OR BETTER

INTERIOR BEARING WALLS 2x AT 16" O.C. U.N.O.

INTERIOR NON-BEARING WALLS 2x AT 24" O.C. U.N.O.

(FOR STUD SPACING AT 24" O.C., THREE-PLY PLYWOOD OR EQUAL WALL SHEATHING SHALL BE APPLIED WITH LONG DIMENSION ACROSS STUDS TO CONFORM WITH TABLE 602.3(3))

GENERAL :

ALL LUMBER SHALL BE PROPERLY STORED OFF GROUND AND ADEQUATELY PROTECTED FROM THE ELEMENTS.

CONTRACTOR SHALL VERIFY THAT ALL FRAMING LUMBER HAS APPROPRIATE AGENCY STAMPS.

CONTRACTOR SHALL SUPERVISE LUMBER SUPPLIER WHILE OFF LOADING LUMBER MATERIAL TO PREVENT DAMAGE, SPLITTING AND / OR BREAKING OF ANY MATERIAL.

FRAMING CONNECTORS NOTED ARE MANUFACTURED BY SIMPSON STRONG TIE COMPANY, INC. SIMPSON STRONG TIE CONNECTORS ARE SPECIFICALLY REQUIRED TO MEET THE STRUCTURAL CALCULATIONS OF THESE PLANS. BEFORE SUBSTITUTING ANOTHER BRAND THE CONTRACTOR SHALL CONFIRM THE LOAD CAPACITY BASED ON RELIABLE PUBLISHED TESTING DATA OR CALCULATIONS FROM THE SUBSTITUTION BRAND COMPANY, PRIOR TO THEIR USE.

ALL LUMBER (INCLUDING POSTS, BEAMS AND LAMINATED LUMBER) EXPOSED TO THE ELEMENTS SHALL BE PRESSURE TREATED PER I.R.C. 2018. ALL FASTENERS FOR PRESSURE TREATED LUMBER SHALL BE AS PER I.R.C. 2018.

PROVIDE DIAGONAL LET IN BRACING AT ALL EXTERIOR CORNERS AT MAXIMUM 25' O.C. USE ⅜" PLYWOOD OR EQUAL SHEAR PANEL WHERE LET IN BRACING IS NOT APPLICABLE.

NON STRUCTURAL FIRE STOPPING AND / OR DRAFT STOPPING ARE NOT INDICATED ON THE STRUCTURAL DRAWINGS AND ARE PER THE ARCHITECTURAL DRAWINGS.

GLU-LAM BEAMS :

GLU-LAM BEAMS SHALL HAVE THE FOLLOWING PROPERTIES:
Fb = 2,400 P.S.I.
Fv = 190 P.S.I.
Fc (PERP) = 450 P.S.I. (COMB. SYM. 24FV4)
E = 1,800,000 P.S.I.

BEAMS CANTILEVERED OVER SUPPORTS SHALL HAVE THE SPECIFIED MINIMUM PROPERTIES TOP AND BOTTOM. (COMB. SYM. 24FV8)

ALL BEAMS SHALL BE FABRICATED USING WATERPROOF GLUE.

FABRICATION AND HANDLING PER LATEST AITC AND WCLA STANDARDS.

BEAMS TO BEAR AITC STAMP AND CERTIFICATE AND GRADE STAMP. CAMBER AS SHOWN ON DRAWINGS.

SILL PLATE :

ALL INTERIOR AND EXTERIOR WALL SILL PLATES TO CONCRETE FOUNDATION WALLS SHALL BE PRESSURE TREATED WITH MINIMUM 2x4 MEMBERS, AND ANCHORED USING ½" DIAMETER ANCHOR BOLTS AT 4'-0" O.C. (MAXIMUM) OR AS SHOWN ON THE DRAWINGS, WHICHEVER IS LESS. THE STRUCTURAL ENGINEER PRIOR TO CONSTRUCTION SHALL TEST ANY ANCHORING METHOD SUBSTITUTION. CONTRACTOR SHALL NOTIFY THE STRUCTURAL ENGINEER IN WRITING DESCRIBING IN DETAIL THE ALTERNATIVE ANCHORING METHOD. MINIMUM BOLTS EMBEDDED SHALL NOT BE LESS THAN 7", WITH A MINIMUM OF TWO ANCHOR BOLTS PER SECTION OF SILL PLATE, AND SHALL BE PLACED 12 INCHES OR LESS THAN SEVEN BOLT DIAMETERS FROM THE END OF EACH SECTION OF SILL PLATE PER I.R.C. 2018.

SHEATHING :

ALL PLYWOOD SHALL CONFIRM TO APA STAND. PS1 AND PRP 108 EXPOSURE 1.

ICC APPROVED ORIENTED STRAND BOARD MAY BE USED IN PLACE OF PLYWOOD (PRP 108).

ALL PLYWOOD SHALL BE OF THE FOLLOWING THICKNESS, AND SHALL BE NAILED WITH COMMON NAILS AS FOLLOWS:

	THICKNESS	EDGE NAILING	INTERIM NAILING
ROOF	½"	8d AT 6" O.C.	8d AT 12" O.C. (U.N.O.)
FLOOR	¾"	10d AT 6" O.C.	10d AT 12" O.C. (U.N.O.)
WALL	7⁄16"	8d AT 6" O.C.	8d AT 12" O.C. (U.N.O.)

DEFERRED SUBMITTAL :

SHOP DRAWING SUBMITTALS REQUIRED BY THESE GENERAL STRUCTURAL NOTES WHICH CONTAIN DESIGN CALCULATIONS SEALED BY A REGISTERED ENGINEER OTHER THAN THE ENGINEER OF RECORD, SHALL BE SUBMITTED DURING CONSTRUCTION TO THE CITY FIELD INSPECTOR FOR REVIEW. THE DOCUMENTS WILL BE FIRST REVIEWED BY THE ENGINEER OF RECORD AND DETERMINED TO BE IN CONFORMANCE WITH THE BUILDING DESIGN. THESE DEFERRED SUBMITTAL ITEMS SHALL NOT BE INSTALLED UNTIL THEIR DESIGN SUBMITTAL DOCUMENTS HAVE BEEN APPROVED BY THE BUILDING OFFICIAL.

SPECIAL INSPECTIONS:

PER THE REQUIREMENTS OF THE INTERNATIONAL BUILDING CODE, SPECIAL INSPECTIONS ARE REQUIRED FOR STRUCTURAL ITEMS SUCH AS:

1. EPOXY PROCEDURES
2. EXPANSION BOLTS
3. 3000 PSI CONCRETE
4. MASONRY BASEMENT AND RETAINING WALLS

ALL PROCEDURES LISTED ABOVE REQUIRE CONSTANT ON-SITE STRUCTURAL SUPERVISION EXCEPT STRUCTURAL WELDING WHICH CAN BE DONE WHEN ALL WELDING IS COMPLETE AND PRIOR TO COVERING UP ANY WELDED ITEMS.

THE INSPECTOR SHALL BE A QUALIFIED PERSON WHO SHALL DEMONSTRATE COMPETENCE TO THE SATISFACTION OF THE BUILDING OFFICIAL, FOR THE INSPECTION OF THE PARTICULAR TYPE OF CONSTRUCTION OR OPERATION REQUIRING SPECIAL INSPECTION.

TABLE R602.3(1)
FASTENER SCHEDULE FOR STRUCTURAL MEMBERS

ITEM	DESCRIPTION OF BUILDING ELEMENTS	NUMBER AND TYPE OF FASTENER (a,b,c)	SPACING AND LOCATION
	ROOF		
1	BLOCKING BETWEEN JOISTS OR RAFTERS TO TOP PLATE	4-8d BOX (2½" X 0.113") OR 3-8d COMMON (2½" X 0.131") OR 3-10d BOX (3" X 0.128) OR 3-3" X 0.131" NAILS	TOE NAIL
2	CEILING JOISTS TO TOP PLATE	4-8d BOX (2½" X 0.113") OR 3-8d COMMON (2½" X 0.131") OR 3-10d BOX (3" X 0.128) OR 3-3" X 0.131" NAILS	PER JOIST, TOE NAIL
3	CEILING JOIST NOT ATTACHED TO PARALLEL RAFTER, LAPS OVER PARTITIONS [SEE SECTIONS R802.3.1, R802.3.2 AND TABLE R802.5.1(9)]	4-10d BOX(3" X 0.128") OR 3-16d COMMON (3½" X 0.162") OR 4-3" X 0.131" NAILS	FACE NAIL
4	CEILING JOIST NOT ATTACHED TO PARALLEL RAFTER (HEEL JOINT) [SEE SECTIONS R802.3.1, R802.3.2 AND TABLE R802.5.1(9)]	TABLE 802.5.1(9)	FACE NAIL
5	COLLAR TIE TO RAFTER, FACE NAIL OR 1¼"x20 GAGE RIDGE STRAP	4-10d BOX(3" X 0.128") OR 3-10d COMMON (3½" X 0.148") OR 4-3" X 0.131" NAILS	FACE NAIL EACH RAFTER
6	RAFTER OR ROOF TRUSS TO PLATE	3-16d BOX (3½" X 0.135") OR 3-10d COMMON (3" X 0.148") OR 4-10d BOX (3" X 0.128) OR 4-3" X 0.131" NAILS	2 TOE NAILS ON ONE SIDE AND 1 TOE NAIL ON OPPOSITE SIDE OF EACH RAFTER OR TRUSS
7	ROOF RAFTERS TO RIDGE, VALLEY OR HIP RAFTERS OR ROOF RAFTER TO MINIMUM 2" RIDGE BEAM	4-16d BOX (3½" X 0.135") OR 3-10d COMMON (3½" X 0.148") OR 4-10d BOX (3" X 0.128) OR 4-3" X 0.131" NAILS	TOE NAIL
		3-16d BOX (3½" X 0.135") OR 2-16d COMMON (3½" X 0.162") OR 3-10d BOX (3" X 0.128) OR 3-3" X 0.131" NAILS	END NAIL
	WALL		
8	STUD TO STUD (NOT AT BRACED WALL PANELS)	16d COMMON (3½" X 0.162")	24" O.C. FACE NAIL
		10d BOX (3" X 0.128") OR 3" x 0.131" NAILS	16" O.C. FACE NAIL
9	STUD TO STUD AND ABUTTING STUDS AT INTERSECTING WALL CORNERS (AT BRACE WALL PANELS)	16d BOX (3½" X 0.135") OR 3" X 0.131" NAILS	12" O.C. FACE NAIL
		16d BOX (3½" X 0.162")	16" O.C. FACE NAIL
10	BUILT-UP HEADER (2" TO 2" HEADER WITH ½" SPACER)	16d COMMON (3½" X 0.162")	16" O.C. EACH EDGE OF FACE NAIL
		16d BOX (3½" X 0.135")	12" O.C. EACH EDGE OF FACE NAIL
11	CONTINUOUS HEADER TO STUD	5-8d BOX(2½" X 0.113") OR 4-8d COMMON (2½" X 0.131") OR 4-10d BOX (3" X 0.128")	TOE NAIL
12	TOP PLATE TO TOP PLATE	16d COMMON (3½" X 0.162")	16" O.C. FACE NAIL
		10d BOX (3" X 0.128") OR 3" x 0.131" NAILS	12" O.C. FACE NAIL
13	DOUPLE TOP PLATE SPLICE FOR SDCs-A-D_2 WITH SEISMIC BRACED WALL LINE SPACING < 25'	8-16d COMMON (3½" X 0.162") OR 12-16d BOX (3½" X 0.135) OR 12-10d BOX (3" X 0.128) OR 12-3" X 0.131" NAILS	FACE NAIL ON EACH SIDE OF END JOINT (MINIMUM 24" LAP SPLICE LENGHT EACH SIDE OF END JOINT)
	DOUPLE TOP PLATE SPLICE SDCs D_0, D_1, OR D_2; AND BRACED WALL LINE SPACING < 25'	12-16d (3½" X 0.135")	
14	BOTTOM PLATE TO JOIST, RIM JOIST, BAND JOIST OR BLOCKING (NOT AT BRACED WALL PANELS)	16d COMMON (3½" X 0.162")	16" O.C. FACE NAIL
		16d BOX (3" X 0.128") OR 3" x 0.131" NAILS	12" O.C. FACE NAIL
15	BOTTOM PLATE TO JOIST, RIM JOIST, BAND JOIST OR BLOCKING AT BRACED WALL PANELS)	3-16d BOX (3½" X 0.135") OR 2-16d COMMON (3½" X 0.162") OR 4-3" X 0.131" NAILS	3 EACH 16" O.C. FACE NAIL 2 EACH 16" O.C. FACE NAIL 4 EACH 16" O.C FACE NAIL
16	TOP OR BOTTOM PLATE TO STUD	4-8d BOX (2½" X 0.113") OR 3-16d BOX (3½" X 0.135") OR 4-8d COMMON (2½" X 0.131") OR 4-10d BOX (3" X 0.128) OR 4-3" X 0.131" NAILS	TOE NAIL
		3-16d BOX (3½" X 0.135") OR 2-16d COMMON (3½" X 0.162") 3-10d BOX (3" X 0.128") OR 3-3" X 0.131" NAILS	END NAIL
17	TOP PLATES, LAPS AT CORNERS AND INTERSECTIONS	3-10d BOX (3" X 0.128") OR 2-16d COMMON (3½" X 0.162") OR 3-3" X 0.131" NAILS	FACE NAIL
18	1" BRACE TO EACH STUD AND PLATE	3-8d BOX (2½" X 0.113") OR 2-8d COMMON (2½" X 0.131") 2-10d BOX (3" X 0.128") OR 2 STAPLES 1¾"	FACE NAIL
19	1" X 6" SHEATHING TO EACH BEARING	3-8d BOX (2½" X 0.113") OR 2-8d COMMON (2½" X 0.131") 2-10d BOX (3" X 0.128") OR 2 STAPLES, 1 CROWN, 16GA 1¾"	FACE NAIL
20	1" X 8" AND WIDER SHEATHING TO EACH BEARING WIDER THAN 1" X 8"	3-8d BOX (2½" X 0.113") OR 3-8d COMMON (2½" X 0.131") 3-10d BOX (3" X 0.128") OR 3 STAPLES, 1" CROWN, 16 GA, 1¾"	FACE NAIL
		4-8d BOX (2½" X 0.113") OR 3-8d COMMON (2½" X 0.131") 3-10d BOX (3" X 0.128") OR 4 STAPLES, 1" CROWN, 16 GA, 1¾"	

TABLE R602.3(1) - CONTINUED
FASTENER SCHEDULE FOR STRUCTURAL MEMBERS

ITEM	DESCRIPTION OF BUILDING ELEMENTS	NUMBER AND TYPE OF FASTENER (a,b,c)	SPACING AND LOCATION
	FLOOR		
21	JOIST TO SILL, TOP PLATE OR GIRDER	4-8d BOX (2½" X 0.113") OR 3-8d COMMON (2½" X 0.131") OR 3-10d BOX (3" X 0.128) OR 3-3" X 0.131" NAILS	TOE NAIL
22	RIM JOIST, BAND JOIST OR BLOCKING TO SILL OR TOP PALTE (ROOF APPLICATIONS ALSO)	8d BOX (2½" X 0.113") OR	4" O.C. FACE NAIL
		8d COMMON (2½" X 0.131") OR 10d BOX (3" X 0.128) OR 3-3" X 0.131" NAILS	6" O.C. FACE NAIL
23	1" X 6" SUBFLOOR OR LESS TO EACH JOIST	3-8d BOX (2½" X 0.113") OR 2-8d COMMON (2½" X 0.131") OR 3-10d BOX (3" X 0.128) OR 2 STAPLES, 1" CROWN, 16 GA, 1¾"	FACE NAIL
24	2" SUBFLOOR TO JOIST OR GIRDER	3-16d BOX (3½" X 0.135") OR 2-16d COMMON (3½" X 0.162")	BLIND AND FACE NAIL
25	2" PLANKS (PLANK & BEAM - FLOOR & ROOF)	3-16d BOX (3½" X 0.135") OR 2-16d COMMON (3½" X 0.162")	AT EACH BEARING FACE NAIL
26	BAND OR RIM JOIST TO JOIST	3-16d COMMON (2½" X 0.162") OR 4-10d BOX (3" X 0.128") OR 4-3" X 0.131" NAILS OR 4-3" X 14GA STAPLES, 7⁄16" CROWN	END NAIL
27	BUILT-UP GIRDERS AND BEAMS, 2-INCH LUMBER LAYERS	20d COMMON (4" X 0.92") OR	NAIL EACH LAYER AS FOLLOWS: 32" O.C. AT TOP AND BOTTOM AND STAGGERED
		3-16d BOX (3½" X 0.135") OR 2-16d COMMON (3½" X 0.162")	24" O.C. FACE NAIL AT TOP AND BOTTOM STAGGERED ON OPPOSITE SIDES
		AND 2-20d COMMON (4" X 0.192") OR 3-10d BOX (3" X 0.128") OR 3-3" X 0.131" NAILS OR	FACE NAIL AT ENDS AND AT EACH SPLICE
28	LEDGER STRIP SUPPORTING JOISTS OR RAFTERS	4-16d BOX (3½" X 0.135") OR 3-16d BOX (3½" X 0.162") OR 4-10d BOX (3" X 0.128") OR 4-3" X 0.131" NAILS	AT EACH JOIST OR RAFTER, FACE NAIL
29	BRIDGING TO JOIST	2-10d BOX (3" X 0.128") OR	EACH END, TOE NAIL

TABLE R602.3(1) - CONTINUED
FASTENER SCHEDULE FOR STRUCTURAL MEMBERS

ITEM	DESCRIPTION OF BUILDING MATERIALS	DESCRIPTION OF FASTENERS (b,c,d,e)	SPACING OF FASTENERS	
			EDGES (INCHES)	INTERMEDIATE SUPPORTS (c,e) (INCHES)
	WOOD STRUCTURAL PANELS, SUBFLOOR, ROOF AND WALL SHEATHING TO FRAMING, AND PARTICLEBOARD WALL SHEATHING TO FRAMING			
30	⅜" -½"	6d COMMON (2"x0.113") (SUBFLOOR, WALL)(j) 8d COMMON (2½"x0.131) NAIL (ROOF)(f)	6	12 (f)
31	19⁄32" - 1"	8d COMMON NAIL (2½"x0.131")	6	12 (f)
32	1⅛" - 1¼"	10d COMMON (3"x0.148") NAIL OR 8d (2½"x0.131") DEFORMED NAIL	6	12
	OTHER WALL SHEATHING (h)			
33	½" REGULAR CELLULOSIC FIBERBOARD SHEATHING	1½" GALVANIZED ROOFING NAIL, 7⁄16" CROWN OR 1" CROWN STAPLE 16 ga., 1 ¼" LONG.	3	6
34	25⁄32" STRUCTURAL CELLULOSIC FIBERBOARD SHEATHING	1¾" GALVANIZED ROOFING NAIL, 7⁄16" CROWN OR 1" CROWN STAPLE 16 ga., 1 ¼" LONG.	3	6
35	½" GYPSUM SHEATHING(d)	1½" GALVANIZED ROOFING NAIL, STAPLE GALVENIZED, 1½" LONG; 1¼" SCREWS, TYPE W OR S	7	7
36	⅝" GYPSUM SHEATHING(d)	1¾" GALVANIZED ROOFING NAIL, STAPLE GALVENIZED, 1½" LONG; 1¼" SCREWS, TYPE W OR S	7	7
Ã	WOOD STRUCTURAL PANELS, COMBINATION SUBFLOOR UNDERLAYMENT TO FRAMING			
37	¾" AND LESS	6d DEFORMED (2" x 0.120") NAIL OR 8d COMMON (2½" x 0.131) NAIL	6	12
38	⅞" - 1"	8d COMMON (2½" x 0.131") NAIL OR 8d DEFORMED (2½" x 0.120) NAIL	6	12
39	1⅛" - 1¼"	10d COMMON (3" x 0.148") NAIL OR 8d DEFORMED (2½" x 0.120) NAIL	6	12

FOR SI: 1 INCH = 25.4 mm, 1 FOOT = 304.8 mm, 1 MILE PER HOUR = 0.447 m/S; 1 Ksi = 6.895 MPa.
a. NAILS ARE SMOOTH-COMMON, BOX OR DEFORMED SHANKS, EXCEPT WHERE OTHERWISE STATED. NAILS USED FOR FRAMING AND SHEATHING CONNECTIONS SHALL HAVE MINIMUM AVERAGE BENDING YIELD STRENGTHS AS SHOWN: 80 ksi (551 MPa) FOR SHANK DIAMETER OF 0.192 INCH (20d COMMON NAIL), 90 ksi (620 MPa) FOR SHANK DIAMETERS LARGER THAN 0.142 INCH BUT NOT LARGER THAN 0.177 INCH, AND 100 ksi (689 MPa) FOR SHANK DIAMETERS OF 0.142 INCH OR LESS.
b. STAPLES ARE 16 GAGE WIRE AND HAVE A MINIMUM 7⁄16" ON DIAMETER CROWN WIDTH.
c. NAILS SHALL BE SPACED AT NO MORE THAN 6" O.C. AT ALL SUPPORTS WHERE SPANS ARE 48" OR GREATER.
d. 4'-0" X 8'-0" OR 4'-0" X 9'-0" PANELS SHALL BE APPLIED VERTICALLY.
e. SPACING OF FASTENERS NOT INCLUDED IN THIS TABLE SHALL BE BASED ON TABLE R602.3(2).
f. WHERE THE ULTIMATE DESIGN WIND SPEED IS 130 MPH OR LESS, NAILS FOR ATTACHING WOOD STRUCTURAL PANEL ROOF SHEATHING TO GABLE END WALL FRAMING BE SPACED 6" O.C.. WHERE THE ULTIMATE DESIGN WIND SPEED IS GREATER THAN 130 MPH, NAILS FOR ATTACHING PANEL ROOF SHEATHING TO INTERMEDIATE SUPPORTS SHALL BE SPACED 6" O.C. FOR A MINIMUM 48" DISTANCE FROM RIDGES, EAVES AND GABLE END WALLS; AND 4" O.C. TO GABLE END WALL FRAMING.
g. GYPSUM SHEATHING SHALL CONFORM TO ASTM C 1396 AND SHALL BE INSTALLED IN ACCORDANCE WITH GA 253. FIBERBOARD SHEATHING SHALL CONFORM TO ASTM C 208.
h. SPACING OF FASTENERS ON FLOOR SHEATHING PANEL EDGES APPLIES TO PANEL EDGES SUPPORTED BY FRAMING MEMBERS AND REQUIRED BLOCKING AND AT ALL FLOOR PERIMETERS ONLY. SPACING OF FASTENERS ON ROOF SHEATHING PANEL EDGES APPLIES TO PANEL EDGES SUPPORTED BY FRAMING MEMBERS AND REQUIRED BLOCKING. BLOCKING OF ROOF OR FLOOR SHEATHING PANEL EDGES PERPENDICULAR TO THE FRAMING MEMBERS NEED NOT BE PROVIDED EXCEPT AS REQUIRED BY OTHER PROVISIONS OF THIS CODE. FLOOR PERIMETER SHALL BE SUPPORTED BY FRAMING MEMBERS OR SOLID BLOCKING.
i. WHERE A RAFTER IS FASTENED TO AN ADJACENT PARALLEL CEILING JOIST IN ACCORDANCE WITH THIS SCHEDULE, PROVIDE TWO TOE NAILS ON ONE SIDE OF THE RAFTER AND TOE NAILS FROM THE CEILING JOIST TO TOP PLATE IN ACCORDANCE WITH THIS SCHEDULE. THE TOE NAIL ON THE OPPOSITE SIDE OF THE RAFTER SHALL NOT BE REQUIRED.

KASNOFF RESIDENCE

15546 EAST TELEGRAPH DRIVE
FOUNTAIN HILLS, ARIZONA 85268

Gilbert Structural LLC
2036 North Gilbert Road
Suite 2-428
Mesa, Arizona 85203
Office 480-398-8144
Fax 480-398-8166

PROFESSIONAL SEAL

Registered Professional Engineer CERTIFICATE NO. 41931 WILLIAM L. GILBERT (Civil) Date Signed.. 2-4-2022 Arizona, U.S.A.

REVISIONS
1 .
2 .
3 .
4 .
5 .

PROJECT NUMBER: -
DATE: 2.4.2022

APPROVED
07/11/2022
TOWN OF FOUNTAIN HILLS INC. 1989 All that is Arizona

SHEET TITLE:
GEN[illegible] STRUCTURAL NOTES

SHEET NUMBER:
GSN

THIS DRAWING IS AN INSTRUMENT OF SERVICE AND THE PROPERTY OF GILBERT STRUCTURAL LLC AND SHALL REMAIN THEIR PROPERTY. THE USE OF THIS DRAWING SHALL BE RESTRICTED TO THE ORIGINAL SITE FOR WHICH IT WAS PREPARED AND PUBLICATION THEREOF IS EXPRESSLY LIMITED TO SUCH USE. REUSE, REPRODUCTION OR PUBLICATION BY ANY METHOD IN WHOLE OR PART IS PROHIBITED WITHOUT THEIR WRITTEN CONSENT.

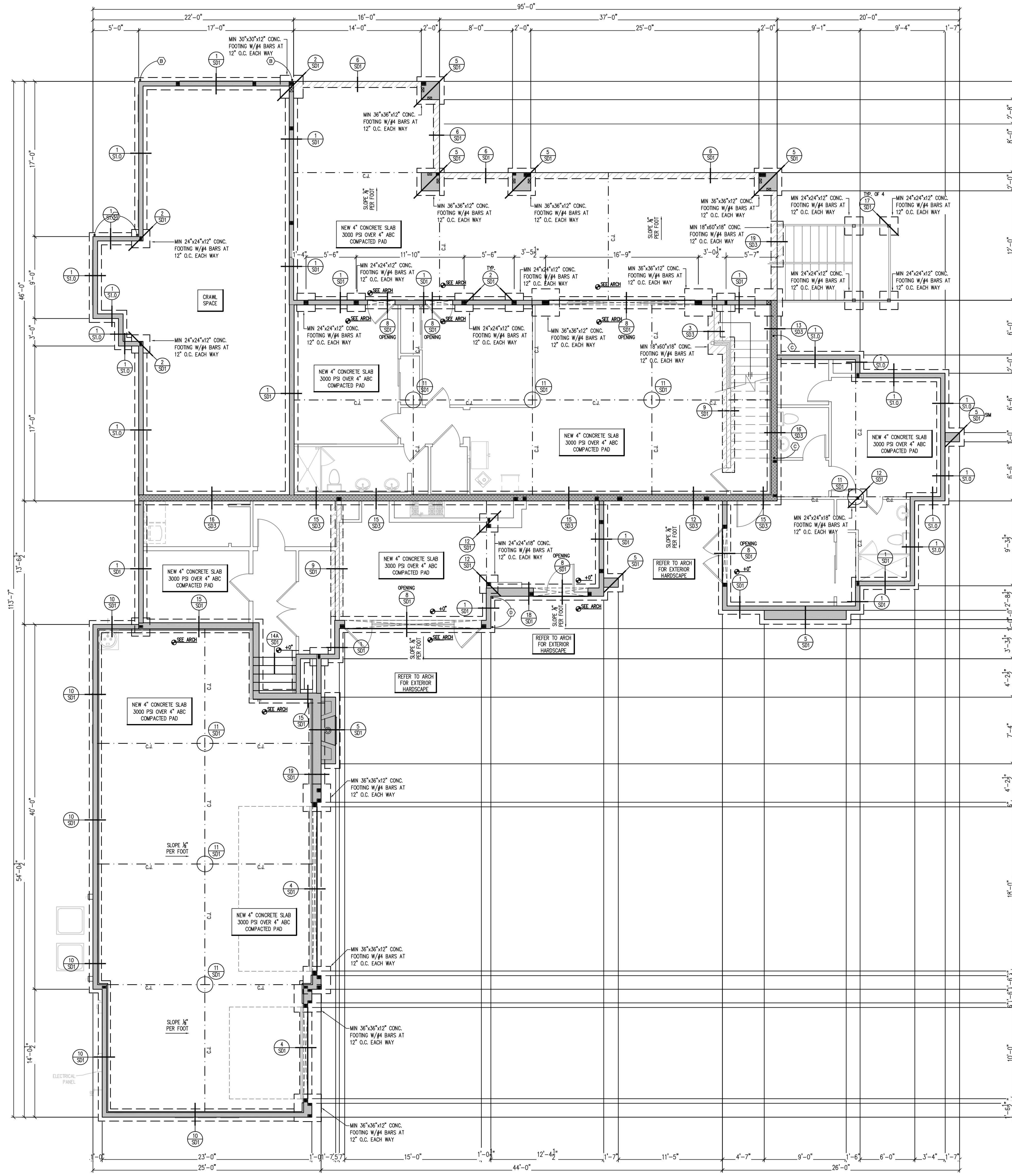

FOUNDATION PLAN

SCALE: 3/16" = 1'-0"

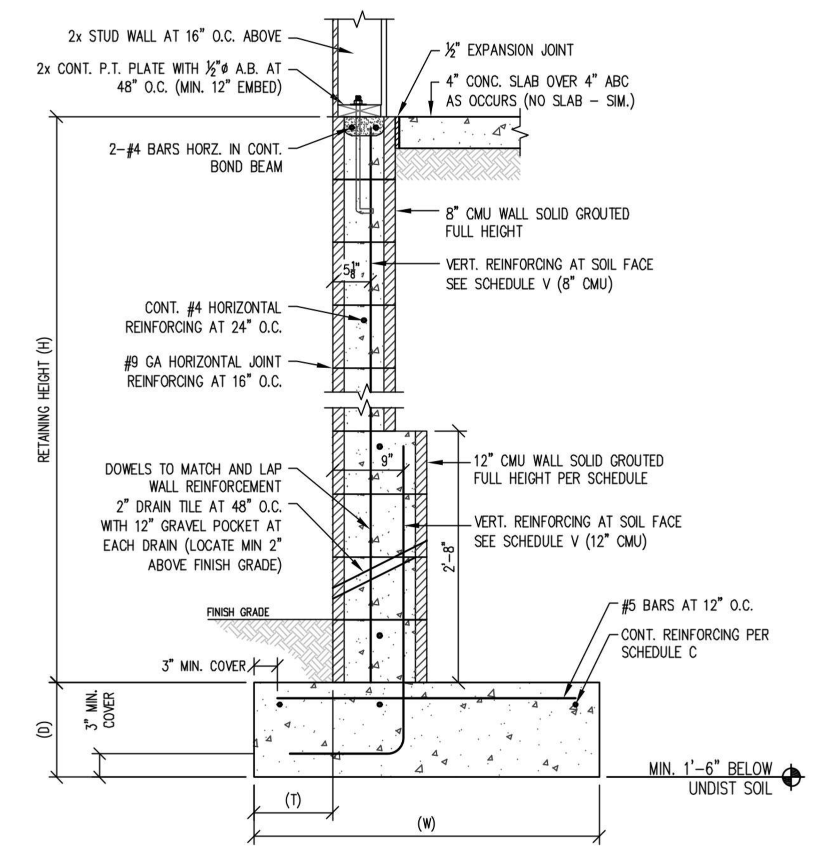

RETAINING WALL AND FOOTING SCHEDULE								
RETAINING HT.	VERT. REINF.	VERT. REINF.	FOOTING SIZE			HEIGHT	HEIGHT	CONC. REINF.
H	V (8" CMU)	V (12" CMU)	T	W	D	8" CMU	12" CMU	C
2'–0" OR LESS	#4 AT 48" O.C.	N/A	0'–8"	2'–4"	12"	2'–0"	N/A	3 – #4
4'–0" OR LESS	#4 AT 32" O.C.	N/A	0'–8"	3'–9"	12"	4'–0"	N/A	3 – #4
6'–0" OR LESS	#5 AT 24" O.C.	N/A	1'–0"	5'–4"	12"	6'–0"	N/A	4 – #4
8'–0" OR LESS	#5 AT 8" O.C.	N/A	1'–0"	7'–2"	12"	8'–0"	N/A	5 – #4
10'–0" OR LESS	#5 AT 8" O.C.	#5 AT 8" O.C.	1'–3"	8'–2"	12"	2'–8" TO 10'–0"	0'–0" TO 2'–8"	5 – #4

1 10'-0" MAX. CANT. RETAINING WALL

SCALE: 3/4"=1'-0"

FOUNDATION NOTES

1. REFER TO STRUCTURAL NOTES PAGE FOR MATERIAL SPECIFICATIONS AND ADDITIONAL REQUIREMENTS NOT LISTED BELOW.
2. ALL CONSTRUCTION AND FOUNDATION WORK SHALL COMPLY WITH THE LATEST ADOPTED VERSION OF ALL APPLICABLE BUILDING CODES.
3. VERIFY ALL FOUNDATION DIMENSIONS WITH ARCHITECTURAL DRAWINGS.
4. ALL WOOD PLATES THAT ANCHOR TO THE FOUNDATION SHALL BE PRESSURE TREATED OR FOUNDATION REDWOOD.
5. COORDINATE FOUNDATION PLAN WITH SHEARWALL PLAN FOR LOCATION OF HOLDOWNS AND SHEARWALL ANCHOR BOLT SPACING.
6. CONTRACTOR TO PLACE CONTROL JOINTS AS INDICATED ON THE FOUNDATION PLAN WHERE APPLICABLE.
7. SEE ARCHITECTURAL PLANS FOR BAY WINDOW OPTIONS.
8. CONTRACTOR SHALL REFER TO ARCHITECTURAL DRAWINGS FOR ANY EXTERIOR SLAB, SIDEWALKS WORKS NOT SHOWN ON THESE DRAWINGS.
9. TYPICAL ANCHOR BOLT 1/2"øx10" LONG AT 32" O.C. UNLESS NOTED OTHERWISE ON PLAN. ALL WOOD SILL PLATES SHALL HAVE MIN. OF 2 ANCHOR BOLTS PER PLATE. ANCHOR BOLTS SHALL BE LOCATED NOT LESS THAN 6" NOR MORE THAN 12" FROM END OF PLATE OR AT PLATE SPLICE. ANCHORS USED FOR HOLDOWNS SHALL NOT BE CONSIDERED IN PLACING ANCHOR BOLTS. REFER SHEAR WALL LAYOUT PLAN FOR THE SPACING OF ANCHOR BOLTS AT THE LOCATION OF SHEAR PANELS. (SIMPSON MASA ANCHORS OR STRONG BOLT2 1/2"ø LDT OR EXPANSION ANCHORS (MIN. 2 1/2" EMBED.) MAYBE USED I.L.O. 1/2"ø EMBEDDED A.B. PROVIDED THEY ARE INSTALLED AT THE SAME SPACING INDICATED IN THE NOTES, DETAILS OR SCHEDULES OF THIS PLAN.)

HOLDOWN SCHEDULE		
MARK	TYPE	DESCRIPTION
B	STHD10	USE STHD10 [WITH (28) 16d SINKER NAILS]
C	HTT-5	USE HTT5 [WITH (26) 10d SINKER NAILS] 5/8"ø STRONG-BOLT 2 WITH 5 1/8" EMBED (ESR-3037)
D	STHD14	USE STHD14 [WITH (38) 16d SINKER NAILS]
I	MSTC78	USE MSTC78 STRAP [WITH (76) 16d SINKER NAILS]

NOTES:
ALL HOLDOWNS SHALL BE ATTACHED TO DOUBLE FULL HEIGHT STUD (MIN.)

- * USE CARBON STEEL FOR STRONG-BOLT 2 AND SPECIAL INSPECTION REQ. ONLY WHEN SPECIFIED (ESR-3037)
- ** SEE DETAIL 12/SD1 FOR RETROFIT HOLDOWN APPLICATION
- *** #4 REBAR REQUIRED FOR HOLDOWNS INSTALLED AT RAISED CURB LOCATIONS ONLY. INSTALL PER MANUFACTURER'S RECOMMENDATIONS.
- **** STANDARD STORY STRAPS REQUIRED AT EACH END OF SECOND STORY SHEAR PANELS U.N.O. SEE DETAILS 7/SD3 AND 8/SD3 FOR STRAPS.

KASNOFF RESIDENCE

15546 EAST TELEGRAPH DRIVE
FOUNTAIN HILLS, ARIZONA 85268

Gilbert Structural LLC
2036 North Gilbert Road
Suite 2-428
Mesa, Arizona 85203
Office 480-398-8144
Fax 480-398-8166

PROFESSIONAL SEAL

Registered Professional Engineer (Civil) CERTIFICATE NO. 41931 WILLIAM L. GILBERT Date Signed.. 2- 4-2022 Arizona, U.S.A.

REVISIONS

1 .
2 .
3 .
4 .
5 .

PROJECT NUMBER: –

DATE: 2.4.2022

APPROVED 07/11/2022

TOWN OF FOUNTAIN HILLS INC. 1989 All that is Arizona

SHEET TITLE:

FOUNDATION LAYOUT

SHEET NUMBER:

S1.0

THIS DRAWING IS AN INSTRUMENT OF SERVICE AND THE PROPERTY OF GILBERT STRUCTURAL LLC AND SHALL REMAIN THEIR PROPERTY. THE USE OF THIS DRAWING SHALL BE RESTRICTED TO THE ORIGINAL SITE FOR WHICH IT WAS PREPARED AND PUBLICATION THEREOF IS EXPRESSLY LIMITED TO SUCH USE. REUSE, REPRODUCTION OR PUBLICATION BY ANY METHOD IN WHOLE OR PART IS PROHIBITED WITHOUT THEIR WRITTEN CONSENT.

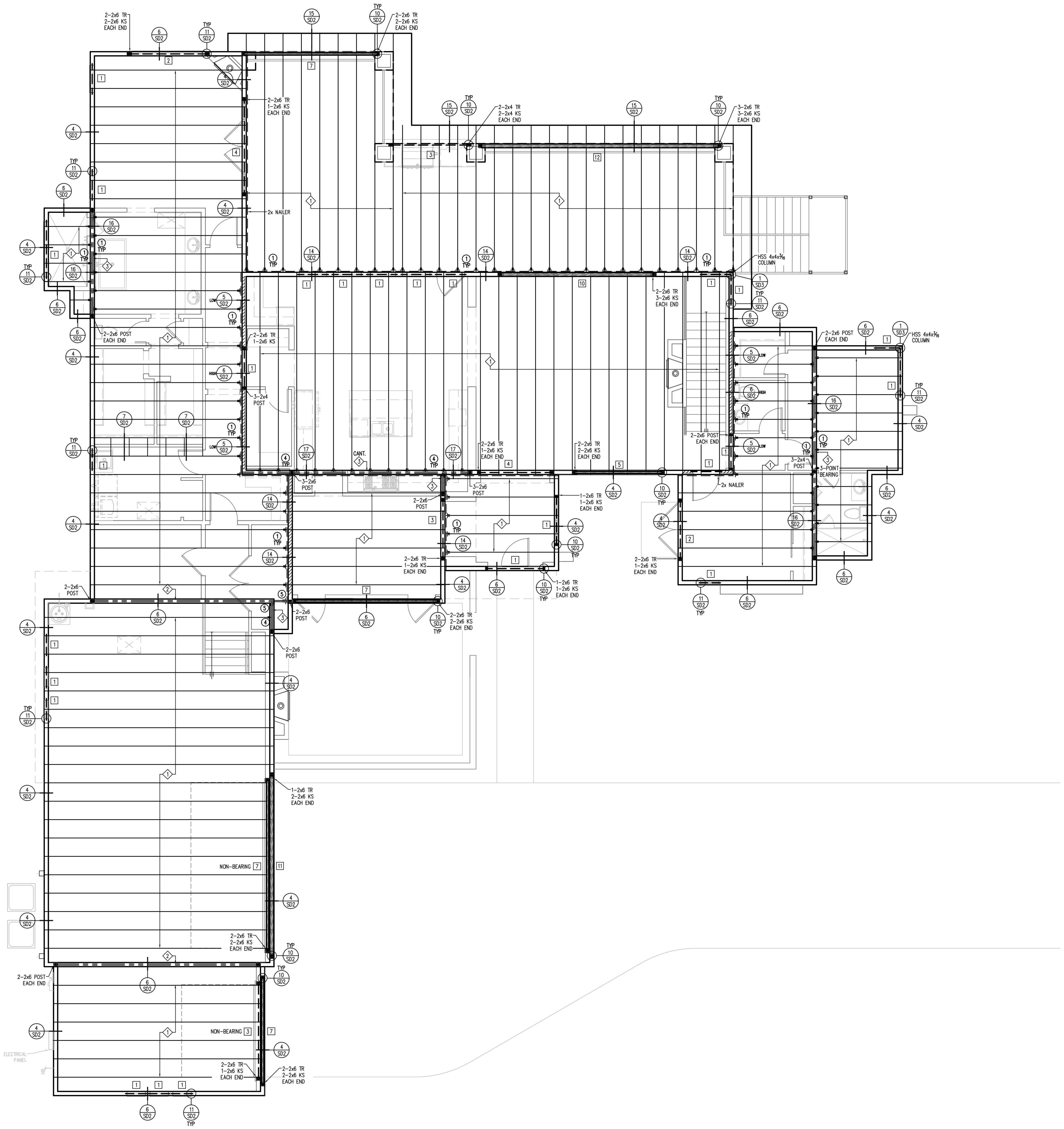

MAIN HOUSE
FRAMING PLAN

SCALE: 3/16" = 1'-0"

LEGEND:

- BEARING WALL
- RAKED CRIPPLE WALL OVER TRUSSES BELOW
- 2-2x POST (U.N.O.)

HANGER SCHEDULE	
(1)	LUS26
(2)	LTHMA
(3)	LTHJ
(4)	HUS26
(5)	HGUS26-2
(6)	THA218
(7)	LSU26

BEAM SCHEDULE	
1	(2) 2x6 DFL #2 OR 4x6
2	(2) 2x8 DFL #2 OR 4x8
3	(2) 2x10 DFL #2 OR 4x10
4	(2) 2x12 DFL #2 OR 4x12
5	(1) 3⅛" x 9" GLB
6	(1) 3⅛" x 10½" GLB
7	(1) 3⅛" x 12" GLB
8	(1) 3⅛" x 15" GLB
9	(1) 5⅛" x 12" GLB
10	(1) 5⅛" x 13½" GLB
11	(1) 5⅛" x 15" GLB
12	(1) 5⅛" x 16½" GLB
13	(1) 5⅛" x 18" GLB

TRUSS SCHEDULE	
1	TAPERED TOP CHORD FLAT ROOF TRUSSES AT 24" O.C.
2	TAPERED TOP CHORD FLAT ROOF GIRDER TRUSS
3	BOX GIRDER TRUSS
4	20" DEEP FLOOR TRUSSES AT 24" O.C.
5	16" DEEP WALK DECK TRUSSES AT 24" O.C.
6	16" DEEP WALK DECK TRUSSES AT 16" O.C.
7	20" DEEP RIM TRUSS
8	20" DEEP FLOOR GIRDER TRUSS

FRAMING NOTES

1. REFER TO STRUCTURAL NOTES PAGE FOR MATERIAL SPECIFICATIONS AND ADDITIONAL REQUIREMENTS NOT LISTED BELOW.
2. ALL FRAMING AND ANCHORING SHALL COMPLY WITH THE LATEST ADOPTED VERSION OF THE BUILDING CODE.
3. EXTERIOR WALLS TO BE 2x STUDS AT 16" O.C., TYPICAL, U.N.O.
4. INTERIOR BEARING WALLS TO BE 2x STUDS AT 16" O.C., U.N.O.
5. INTERIOR PARTITION WALLS TO BE 2x STUDS AT 24" O.C., TYPICAL U.N.O.
6. ALL POSTS TO BE 2-2x THE WALL THICKNESS, U.N.O.
7. SINGLE TRIMMER IS TO BE PROVIDED UNDER THE ENDS OF ALL BEAMS AND HEADERS, U.N.O.
8. ALL JOISTS SHALL BEAR A MINIMUM OF 2" ON ALL BEAMS OR WALL PLATES.
9. PROVIDE H2.5T TIE AT EACH TRUSS ALONG INTERIOR BEARING WALLS.
10. METAL CONNECTORS, HANGERS AND TIES TO BE "SIMPSON STRONG-TIE" OR APPROVED EQUAL.
11. ALL ROOF TRUSSES SHALL BE AT 24" O.C. U.N.O.
12. ALL TRUSSES AND STRUCTURAL MEMBERS SHALL BE BRACED, BLOCKED AND SUPPORTED AT ALL TIMES DURING CONSTRUCTION.
13. TRUSS MANUFACTURER TO COORDINATE WITH MECHANICAL AND ARCHITECTURAL DRAWINGS FOR EXACT WEIGHT AND LOCATION OF MECHANICAL EQUIPMENT.
14. SEE MECHANICAL AND ARCHITECTURAL PLANS FOR LOCATIONS OF SOFFITS AND LOWERED SOFFITS.
15. PROVIDE BLOCK-OUTS IN ROOF FOR FIREPLACE FLUES, PLUMBING, ETC. VERIFY LOCATIONS OF FIREPLACE FLUES PRIOR TO CONSTRUCTION.
16. PROVIDE CROSS BLOCKING AND 1/2" PLYWOOD BACKING AT ALL CEILING FAN LOCATIONS.
17. REFER TO ARCHITECTURAL FLOOR AND/OR ROOF PLANS FOR ATTIC ACCESS LOCATIONS AND CODE REQUIREMENTS.
18. PROVIDE 2x BLOCKING AT ALL HIPS AND RIDGES FOR PANEL EDGE NAILING REFER TO ENGINEERING SPECIFICATIONS.
19. PROVIDE SIMP. STCT CLIP AT ALL TRUSSES TO EXTERIOR NON-BEARING WALLS.
20. SIMPSON H2.5T OR RSP4 NOT REQUIRED AT TOP OR BOTTOM PLATE CONNECTIONS IF OSB IS INSTALLED AT THAT LOCATION.
21. 16-GAUGE 1¾" LONG (½" CROWN) STAPLES MAY BE USED IN LIEU OF 8d NAILS FOR ROOF SHEATHING CONNECTIONS. SAME SPACING APPLIES TO BOTH 8d NAILS AND 16-GAUGE STAPLES.
22. GIRDER TRUSS POST REQUIREMENTS:
    - SINGLE PLY GIRDER TRUSS – USE 1-2x (WALL THICKNESS) U.N.O.
    - TWO PLY GIRDER TRUSS – USE 2-2x (WALL THICKNESS) U.N.O.
    - THREE PLY GIRDER TRUSS – USE 3-2x (WALL THICKNESS) U.N.O.
    -

KASNOFF RESIDENCE

15546 EAST TELEGRAPH DRIVE
FOUNTAIN HILLS, ARIZONA 85268

Gilbert Structural LLC
2036 North Gilbert Road
Suite 2-428
Mesa, Arizona 85203
Office 480-398-8144
Fax 480-398-8166

PROFESSIONAL SEAL

Registered Professional Engineer (Civil)
CERTIFICATE NO.
41931
WILLIAM L.
GILBERT
Date Signed.. 2-4-2022
Arizona, U.S.A.

REVISIONS

1 .
2 .
3 .
4 .
5 .

PROJECT NUMBER: -

DATE: 2.4.2022

APPROVED
07/11/2022
TOWN OF FOUNTAIN HILLS INC. 1989
All that is Arizona

SHEET TITLE:

FRAMING LAYOUT

SHEET NUMBER:

S2.0

THIS DRAWING IS AN INSTRUMENT OF SERVICE AND THE PROPERTY OF GILBERT STRUCTURAL LLC AND SHALL REMAIN THEIR PROPERTY. THE USE OF THIS DRAWING SHALL BE RESTRICTED TO THE ORIGINAL SITE FOR WHICH IT WAS PREPARED AND PUBLICATION THEREOF IS EXPRESSLY LIMITED TO SUCH USE. REUSE, REPRODUCTION OR PUBLICATION BY ANY METHOD IN WHOLE OR PART IS PROHIBITED WITHOUT THEIR WRITTEN CONSENT.

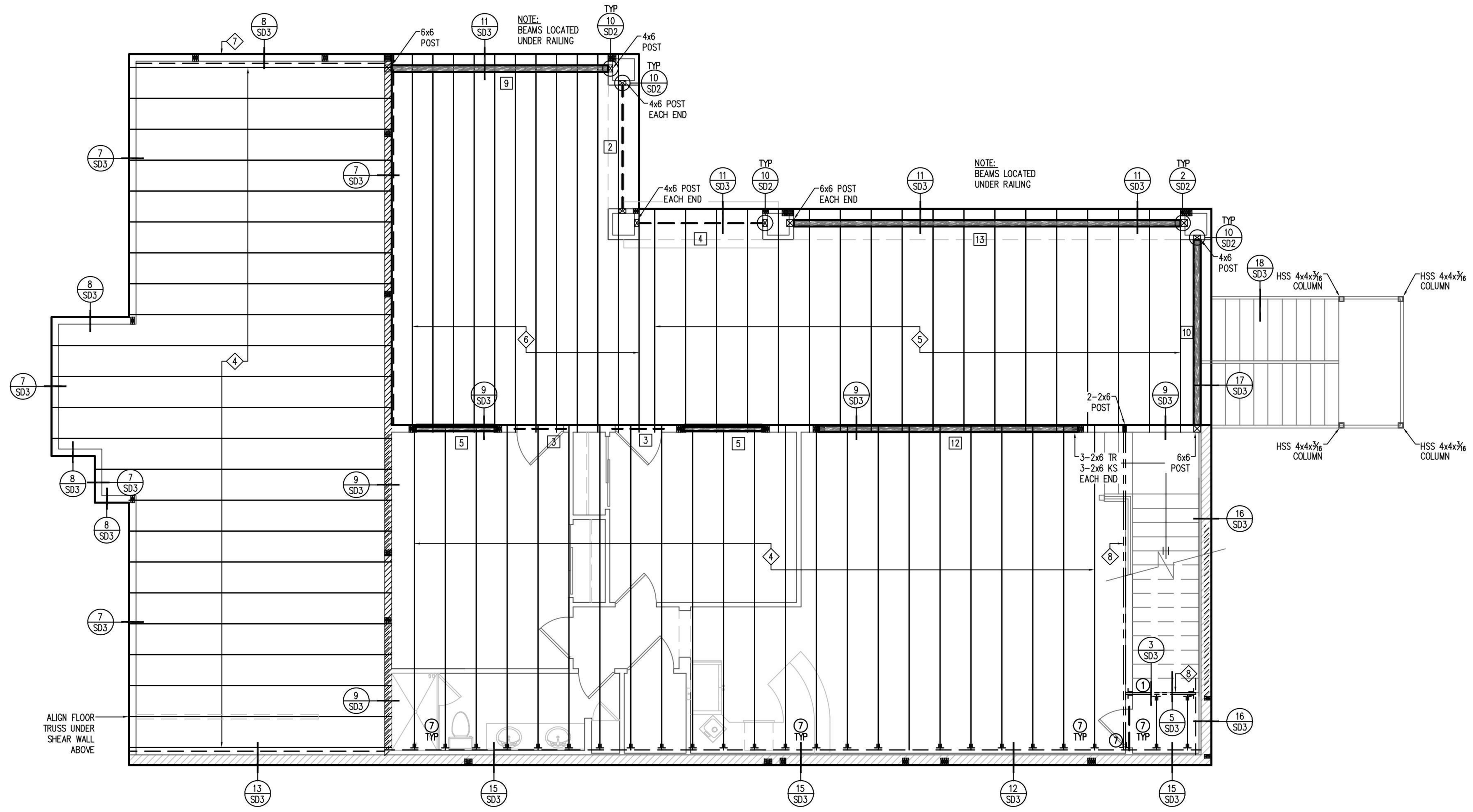

BASEMENT FRAMING PLAN

SCALE: 3/16" = 1'-0"

LEGEND:
- BEARING WALL
- RAKED CRIPPLE WALL OVER TRUSSES BELOW
- 2–2x POST (U.N.O.)

HANGER SCHEDULE	
1	LUS26
2	LTHMA
3	LTHJ
4	HUS26
5	HGUS26–2
6	THA218
7	LSU26

BEAM SCHEDULE	
1	(2) 2x6 DFL #2 OR 4x6
2	(2) 2x8 DFL #2 OR 4x8
3	(2) 2x10 DFL #2 OR 4x10
4	(2) 2x12 DFL #2 OR 4x12
5	(1) 3⅛" x 9" GLB
6	(1) 3⅛" x 10½" GLB
7	(1) 3⅛" x 12" GLB
8	(1) 3⅛" x 15" GLB
9	(1) 5⅛" x 12" GLB
10	(1) 5⅛" x 13½" GLB
11	(1) 5⅛" x 15" GLB
12	(1) 5⅛" x 16½" GLB
13	(1) 5⅛" x 18" GLB

TRUSS SCHEDULE	
1	TAPERED TOP CHORD FLAT ROOF TRUSSES AT 24" O.C.
2	TAPERED TOP CHORD FLAT ROOF GIRDER TRUSS
3	BOX GIRDER TRUSS
4	20" DEEP FLOOR TRUSSES AT 24" O.C.
5	16" DEEP WALK DECK TRUSSES AT 24" O.C.
6	16" DEEP WALK DECK TRUSSES AT 16" O.C.
7	20" DEEP RIM TRUSS
8	20" DEEP FLOOR GIRDER TRUSS

FRAMING NOTES

1. REFER TO STRUCTURAL NOTES PAGE FOR MATERIAL SPECIFICATIONS AND ADDITIONAL REQUIREMENTS NOT LISTED BELOW.
2. ALL FRAMING AND ANCHORING SHALL COMPLY WITH THE LATEST ADOPTED VERSION OF THE BUILDING CODE.
3. EXTERIOR WALLS TO BE 2x STUDS AT 16" O.C., TYPICAL, U.N.O.
4. INTERIOR BEARING WALLS TO BE 2x STUDS AT 16" O.C., U.N.O.
5. INTERIOR PARTITION WALLS TO BE 2x STUDS AT 24" O.C., TYPICAL U.N.O.
6. ALL POSTS TO BE 2–2x THE WALL THICKNESS, U.N.O.
7. SINGLE TRIMMER IS TO BE PROVIDED UNDER THE ENDS OF ALL BEAMS AND HEADERS, U.N.O.
8. ALL JOISTS SHALL BEAR A MINIMUM OF 2" ON ALL BEAMS OR WALL PLATES.
9. PROVIDE H2.5T TIE AT EACH TRUSS ALONG INTERIOR BEARING WALLS.
10. METAL CONNECTORS, HANGERS AND TIES TO BE "SIMPSON STRONG–TIE" OR APPROVED EQUAL.
11. ALL ROOF TRUSSES SHALL BE AT 24" O.C. U.N.O.
12. ALL TRUSSES AND STRUCTURAL MEMBERS SHALL BE BRACED, BLOCKED AND SUPPORTED AT ALL TIMES DURING CONSTRUCTION.
13. TRUSS MANUFACTURER TO COORDINATE WITH MECHANICAL AND ARCHITECTURAL DRAWINGS FOR EXACT WEIGHT AND LOCATION OF MECHANICAL EQUIPMENT.
14. SEE MECHANICAL AND ARCHITECTURAL PLANS FOR LOCATIONS OF SOFFITS AND LOWERED SOFFITS.
15. PROVIDE BLOCK–OUTS IN ROOF FOR FIREPLACE FLUES, PLUMBING, ETC. VERIFY LOCATIONS OF FIREPLACE FLUES PRIOR TO CONSTRUCTION.
16. PROVIDE CROSS BLOCKING AND 1/2" PLYWOOD BACKING AT ALL CEILING FAN LOCATIONS.
17. REFER TO ARCHITECTURAL FLOOR AND/OR ROOF PLANS FOR ATTIC ACCESS LOCATIONS AND CODE REQUIREMENTS.
18. PROVIDE 2x BLOCKING AT ALL HIPS AND RIDGES FOR PANEL EDGE NAILING REFER TO ENGINEERING SPECIFICATIONS.
19. PROVIDE SIMP. STCT CLIP AT ALL TRUSSES TO EXTERIOR NON–BEARING WALLS.
20. SIMPSON H2.5T OR RSP4 NOT REQUIRED AT TOP OR BOTTOM PLATE CONNECTIONS IF OSB IS INSTALLED AT THAT LOCATION.
21. 16–GAUGE 1¾" LONG (½" CROWN) STAPLES MAY BE USED IN LIEU OF 8d NAILS FOR ROOF SHEATHING CONNECTIONS. SAME SPACING APPLIES TO BOTH 8d NAILS AND 16–GAUGE STAPLES.
22. GIRDER TRUSS POST REQUIREMENTS:
    - SINGLE PLY GIRDER TRUSS – USE 1–2x (WALL THICKNESS) U.N.O.
    - TWO PLY GIRDER TRUSS – USE 2–2x (WALL THICKNESS) U.N.O.
    - THREE PLY GIRDER TRUSS – USE 3–2x (WALL THICKNESS) U.N.O.
    -

KASNOFF RESIDENCE

15546 EAST TELEGRAPH DRIVE
FOUNTAIN HILLS, ARIZONA 85268

Gilbert Structural LLC
2036 North Gilbert Road
Suite 2-428
Mesa, Arizona 85203
Office 480-398-8144
Fax 480-398-8166

PROFESSIONAL SEAL

Registered Professional Engineer (Civil) CERTIFICATE NO. 41931 WILLIAM L. GILBERT Date Signed.. 2-4-2022 Arizona, U.S.A.

REVISIONS
1 .
2 .
3 .
4 .
5 .

PROJECT NUMBER: -
DATE: 2.4.2022

APPROVED 07/11/2022
TOWN OF FOUNTAIN HILLS INC. 1989 All that is Arizona

SHEET TITLE:
FRAMING LAYOUT

SHEET NUMBER:
S2.1

THIS DRAWING IS AN INSTRUMENT OF SERVICE AND THE PROPERTY OF GILBERT STRUCTURAL LLC AND SHALL REMAIN THEIR PROPERTY. THE USE OF THIS DRAWING SHALL BE RESTRICTED TO THE ORIGINAL SITE FOR WHICH IT WAS PREPARED AND PUBLICATION THEREOF IS EXPRESSLY LIMITED TO SUCH USE. REUSE, REPRODUCTION OR PUBLICATION BY ANY METHOD IN WHOLE OR PART IS PROHIBITED WITHOUT THEIR WRITTEN CONSENT.

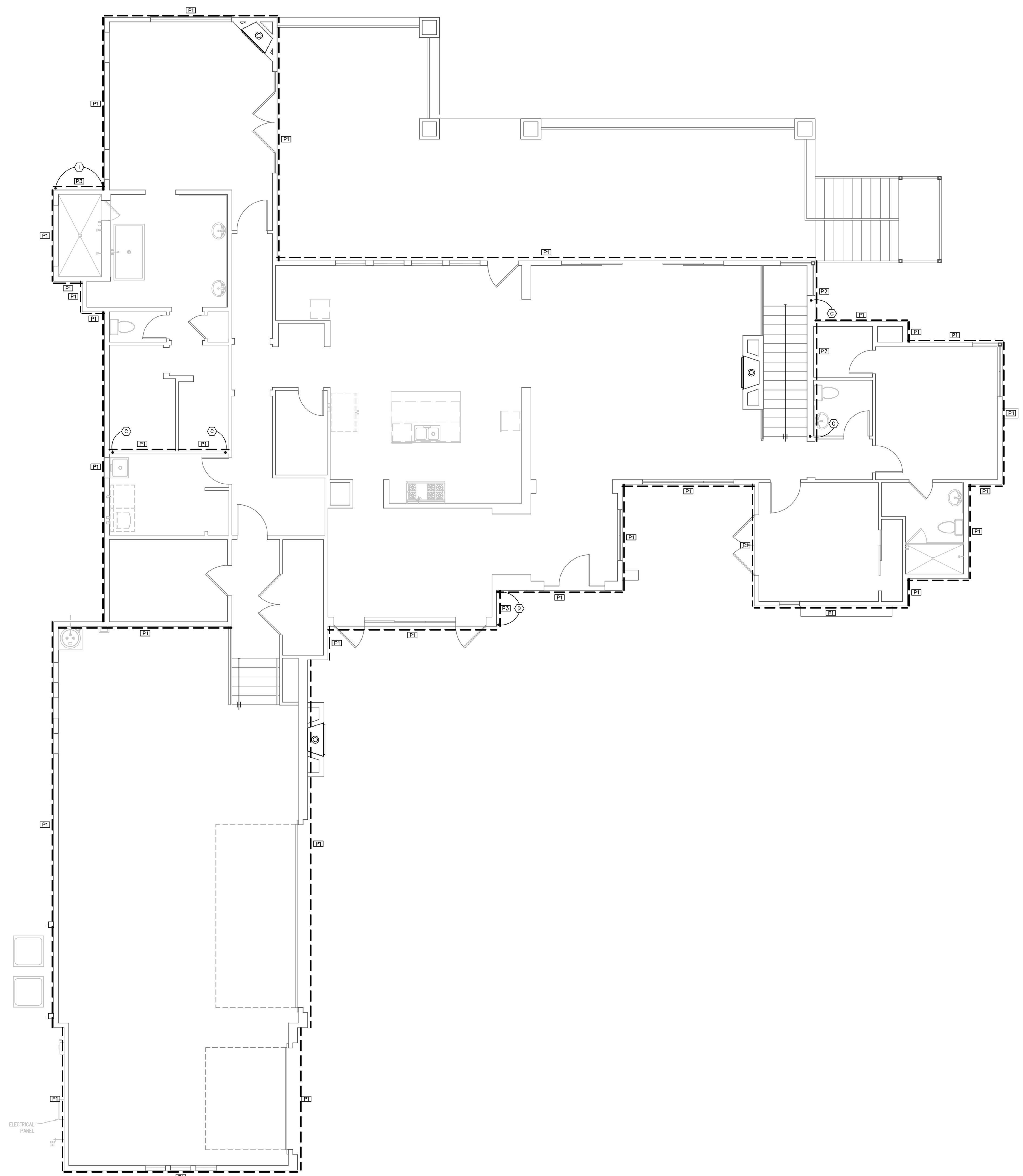

MAIN HOUSE
SHEARWALL PLAN

SCALE: 3/16" = 1'-0"

MARK	TYPE	DESCRIPTION
HOLDOWN SCHEDULE		
B	STHD10	USE STHD10 [WITH (28) 16d SINKER NAILS]
C	HTT-5	USE HTT5 [WITH (26) 10d SINKER NAILS] ⅝"ø STRONG-BOLT 2 WITH 5-⅛" EMBED (ESR #3037)
D	STHD14	USE STHD14 [WITH (38) 16d SINKER NAILS]
I	MSTC78	USE MSTC78 STRAP [WITH (76) 16d SINKER NAILS]

NOTES:
ALL HOLDOWNS SHALL BE ATTACHED TO DOUBLE FULL HEIGHT STUD (MIN.)

* USE CARBON STEEL FOR STRONG-BOLT 2 AND SPECIAL INSPECTION REQ. ONLY WHEN SPECIFIED (ESR-3037)
** SEE DETAIL 12/SD1 FOR RETROFIT HOLDOWN APPLICATION
*** #4 REBAR REQUIRED FOR HOLDOWNS INSTALLED AT RAISED CURB LOCATIONS ONLY. INSTALL PER MANUFACTURER'S RECOMMENDATIONS.
**** STANDARD STORY STRAPS REQUIRED AT EACH END OF SECOND STORY SHEAR PANELS U.N.O. SEE DETAILS 7/SD3 AND 8/SD3 FOR STRAPS.

MARK	SHEATHING SCHEDULE DESCRIPTION	SILL PLATE NAIL SPACING – SHEARWALL AT UPPER FLOORS (16d NAILS)
P1	7/16" PLYWOOD/OSB w/8d AT 6" O.C. EDGES /12" O.C. FIELD (BLOCKED) (EXTERIOR): ½" X 10" ANCHOR BOLTS AT 32" O.C. (INTERIOR): ½"ø SIMP. STRONG-BOLT 2 A.B. AT 32" O.C. (EMBED 2¾" MIN. ESR-3037)	(2) ROWS AT 4"
P2	7/16" PLYWOOD/OSB w/8d AT 4" O.C. EDGES /12" O.C. FIELD (BLOCKED) (EXTERIOR): ½" X 10" ANCHOR BOLTS AT 24" O.C. (INTERIOR): ½"ø SIMP. STRONG-BOLT 2 A.B. AT 24" O.C. (EMBED 2¾" MIN. ESR-3037)	(2) ROWS AT 3"
P3 *	7/16" PLYWOOD/OSB w/8d AT 3" O.C. EDGES /12" O.C. FIELD (BLOCKED) (EXTERIOR): ½" X 10" ANCHOR BOLTS AT 16" O.C. (INTERIOR): ½"ø SIMP. STRONG-BOLT 2 A.B. AT 16" O.C. (EMBED 2¾" MIN. ESR-3037)	(2) ROWS AT 2½"

ALL SHEARWALLS TO HAVE DOUBLE TOP PLATES AND 2x STUDS AT 16" O.C. – U.N.O.

* FRAMING AT ADJOINING PANEL EDGES SHALL BE 3" NOMINAL OR WIDER, AND NAILS SHALL BE STAGGERED WHERE NAILS ARE SPACED LESS THAN 3" O.C.
** USE CARBON STEEL FOR STRONG-BOLT 2 AND SPECIAL INSPECTION REQ. ONLY WHEN SPECIFIED. (ESR-3037)
*** AS AN ALTERNATE TO WET-SET ANCHOR BOLTS AND STRONG-BOLT 2 ANCHORS, SIMPSON TITEN-HD ANCHOR BOLTS MAY BE USED PROVIDED THE SAME SPACING IS ADHERED TO AS STATED IN THE SCHEDULE ABOVE. THE ANCHORS SHALL BE ½"ø x 5" WITH A MINIMUM EMBEDMENT OF 3½" (ESR-2713).
**** AS AN ALTERNATE TO 5d COOLER NAILS, #6 1¼" TYPE 'W' DRYWALL SCREWS MAY BE USED. AS AN ALTERNATE TO 6d COOLER NAILS, #6 1⅝" TYPE 'W' DRYWALL SCREWS MAY BE USED. SAME SPACING APPLIES PER SCHEDULE.

KASNOFF RESIDENCE

15546 EAST TELEGRAPH DRIVE
FOUNTAIN HILLS, ARIZONA 85268

Gilbert Structural LLC
2036 North Gilbert Road
Suite 2-428
Mesa, Arizona 85203
Office 480-398-8144
Fax 480-398-8166

PROFESSIONAL SEAL
Registered Professional Engineer (Civil) CERTIFICATE NO. 41931 WILLIAM L. GILBERT Date Signed.. 2-4-2022 Arizona, U.S.A.

REVISIONS
1 .
2 .
3 .
4 .
5 .

PROJECT NUMBER: –
DATE: 2.4.2022

APPROVED
07/11/2022
TOWN OF FOUNTAIN HILLS INC. 1989 All that is Arizona

SHEET TITLE:
SHEARWALL LAYOUT

SHEET NUMBER:
S3.0

THIS DRAWING IS AN INSTRUMENT OF SERVICE AND THE PROPERTY OF GILBERT STRUCTURAL LLC AND SHALL REMAIN THEIR PROPERTY. THE USE OF THIS DRAWING SHALL BE RESTRICTED TO THE ORIGINAL SITE FOR WHICH IT WAS PREPARED AND PUBLICATION THEREOF IS EXPRESSLY LIMITED TO SUCH USE. REUSE, REPRODUCTION OR PUBLICATION BY ANY METHOD IN WHOLE OR PART IS PROHIBITED WITHOUT THEIR WRITTEN CONSENT.

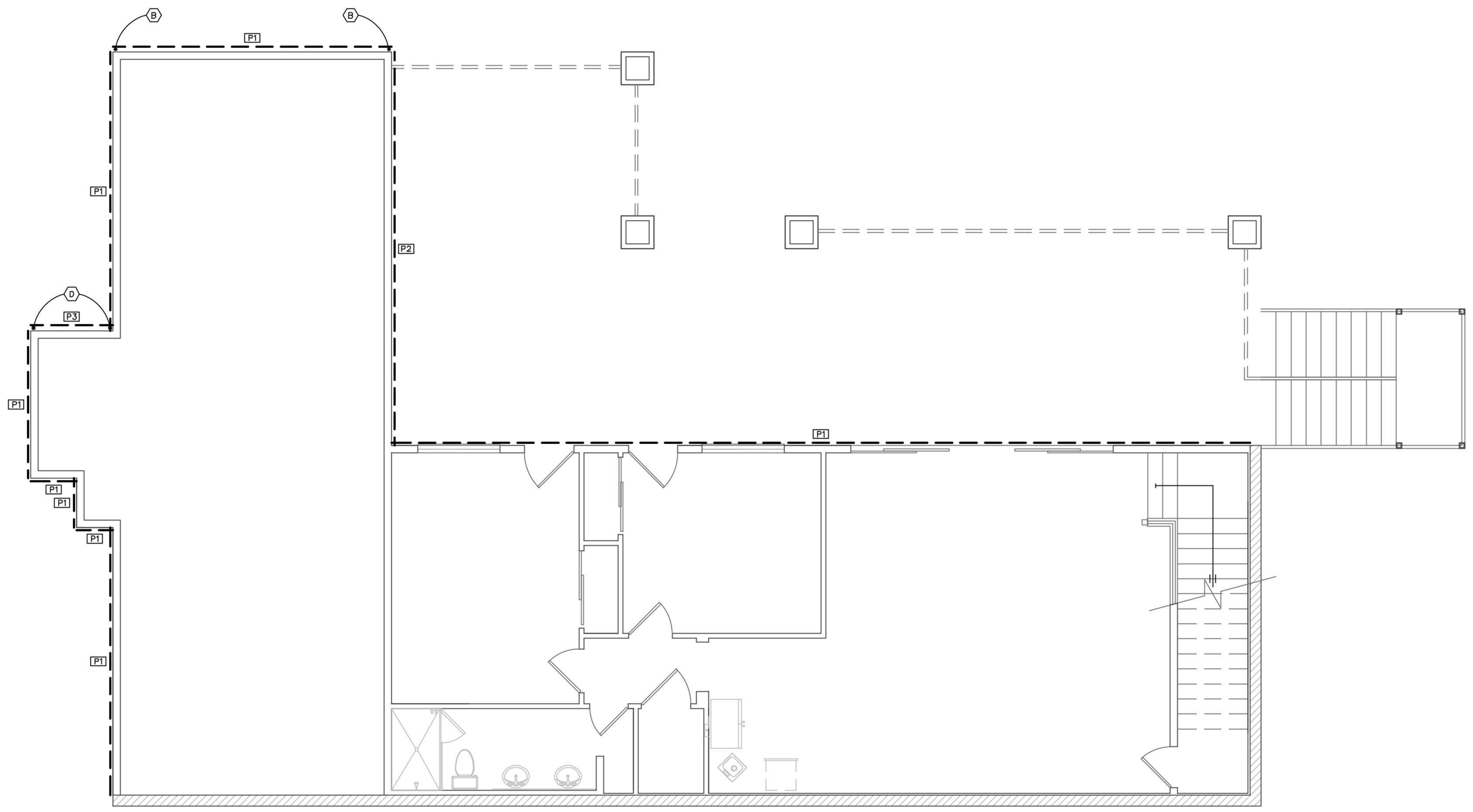

BASEMENT SHEARWALL PLAN

SCALE: 3/16" = 1'-0"

HOLDOWN SCHEDULE		
MARK	TYPE	DESCRIPTION
B	STHD10	USE STHD10 [WITH (28) 16d SINKER NAILS]
C	HTT-5	USE HTT5 [WITH (26) 10d SINKER NAILS] ⅝"ø STRONG-BOLT 2 WITH 5-⅛" EMBED (ESR #3037)
D	STHD14	USE STHD14 [WITH (38) 16d SINKER NAILS]
I	MSTC78	USE MSTC78 STRAP [WITH (76) 16d SINKER NAILS]

NOTES:
ALL HOLDOWNS SHALL BE ATTACHED TO DOUBLE FULL HEIGHT STUD (MIN.)

- * USE CARBON STEEL FOR STRONG-BOLT 2 AND SPECIAL INSPECTION REQ. ONLY WHEN SPECIFIED (ESR-3037)
- ** SEE DETAIL 12/SD1 FOR RETROFIT HOLDOWN APPLICATION
- *** #4 REBAR REQUIRED FOR HOLDOWNS INSTALLED AT RAISED CURB LOCATIONS ONLY. INSTALL PER MANUFACTURER'S RECOMMENDATIONS.
- **** STANDARD STORY STRAPS REQUIRED AT EACH END OF SECOND STORY SHEAR PANELS U.N.O. SEE DETAILS 7/SD3 AND 8/SD3 FOR STRAPS.

SHEATHING SCHEDULE		SILL PLATE NAIL SPACING – SHEARWALL AT UPPER FLOORS (16d NAILS)
MARK	DESCRIPTION	
P1	7/16" PLYWOOD/OSB w/8d AT 6" O.C. EDGES /12" O.C. FIELD (BLOCKED) (EXTERIOR): ½" X 10" ANCHOR BOLTS AT 32" O.C. (INTERIOR): ½"ø SIMP. STRONG-BOLT 2 A.B. AT 32" O.C. (EMBED 2¾" MIN. ESR-3037)	(2) ROWS AT 4"
P2	7/16" PLYWOOD/OSB w/8d AT 4" O.C. EDGES /12" O.C. FIELD (BLOCKED) (EXTERIOR): ½" X 10" ANCHOR BOLTS AT 24" O.C. (INTERIOR): ½"ø SIMP. STRONG-BOLT 2 A.B. AT 24" O.C. (EMBED 2¾" MIN. ESR-3037)	(2) ROWS AT 3"
P3 *	7/16" PLYWOOD/OSB w/8d AT 3" O.C. EDGES /12" O.C. FIELD (BLOCKED) (EXTERIOR): ½" X 10" ANCHOR BOLTS AT 16" O.C. (INTERIOR): ½"ø SIMP. STRONG-BOLT 2 A.B. AT 16" O.C. (EMBED 2¾" MIN. ESR-3037)	(2) ROWS AT 2½"

ALL SHEARWALLS TO HAVE DOUBLE TOP PLATES AND 2x STUDS AT 16" O.C. – U.N.O.

- * FRAMING AT ADJOINING PANEL EDGES SHALL BE 3" NOMINAL OR WIDER, AND NAILS SHALL BE STAGGERED WHERE NAILS ARE SPACED LESS THAN 3" O.C.
- ** USE CARBON STEEL FOR STRONG-BOLT 2 AND SPECIAL INSPECTION REQ. ONLY WHEN SPECIFIED. (ESR-3037)
- *** AS AN ALTERNATE TO WET-SET ANCHOR BOLTS AND STRONG-BOLT 2 ANCHORS, SIMPSON TITEN-HD ANCHOR BOLTS MAY BE USED PROVIDED THE SAME SPACING IS ADHERED TO AS STATED IN THE SCHEDULE ABOVE. THE ANCHORS SHALL BE ½"ø x 5" WITH A MINIMUM EMBEDMENT OF 3½" (ESR-2713).
- **** AS AN ALTERNATE TO 5d COOLER NAILS, #6 1¼" TYPE 'W' DRYWALL SCREWS MAY BE USED. AS AN ALTERNATE TO 6d COOLER NAILS, #6 1⅝" TYPE 'W' DRYWALL SCREWS MAY BE USED. SAME SPACING APPLIES PER SCHEDULE.

KASNOFF RESIDENCE

15546 EAST TELEGRAPH DRIVE
FOUNTAIN HILLS, ARIZONA 85268

Gilbert Structural LLC
2036 North Gilbert Road
Suite 2-428
Mesa, Arizona 85203
Office 480-398-8144
Fax 480-398-8166

PROFESSIONAL SEAL

Registered Professional Engineer (Civil) CERTIFICATE NO. 41931 WILLIAM L. GILBERT Date Signed.. 2-4-2022 Arizona, U.S.A.

REVISIONS

1 .
2 .
3 .
4 .
5 .

PROJECT NUMBER: –

DATE: 2.4.2022

APPROVED 07/11/2022

TOWN OF FOUNTAIN HILLS INC. 1989 All that is Arizona

SHEET TITLE:

SHEARWALL LAYOUT

SHEET NUMBER:

S3.1

THIS DRAWING IS AN INSTRUMENT OF SERVICE AND THE PROPERTY OF GILBERT STRUCTURAL LLC AND SHALL REMAIN THEIR PROPERTY. THE USE OF THIS DRAWING SHALL BE RESTRICTED TO THE ORIGINAL SITE FOR WHICH IT WAS PREPARED AND PUBLICATION THEREOF IS EXPRESSLY LIMITED TO SUCH USE. REUSE, REPRODUCTION OR PUBLICATION BY ANY METHOD IN WHOLE OR PART IS PROHIBITED WITHOUT THEIR WRITTEN CONSENT.

NOTE:
1. SIMPSON MASA MAY BE USED IN LIEU OF ½"ø ANCHOR BOLTS
2. SEE 10/SD3 FOR RETAINING IN ALL STEM HEIGHTS GREATER THAN 1'-6" ABOVE FINISHED GRADE

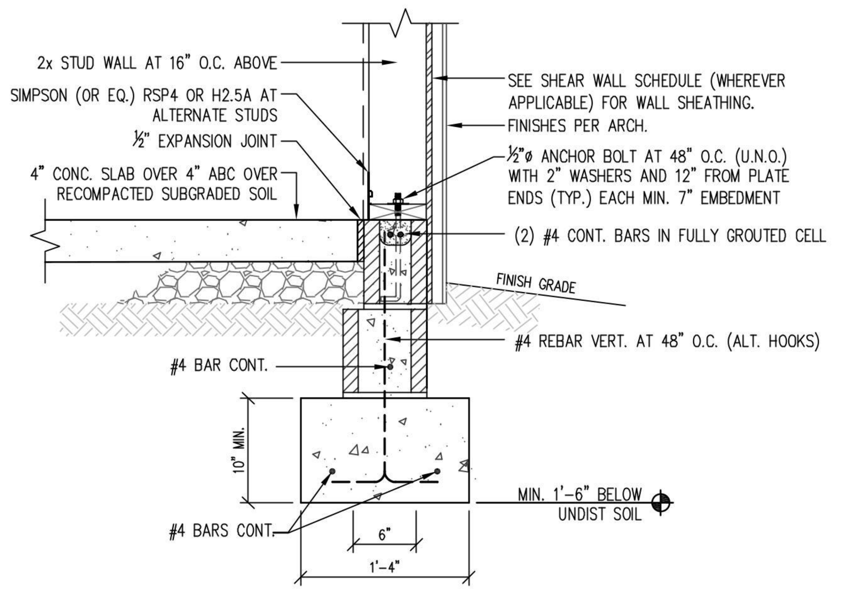

1 EXTERIOR WALL AND FOOTING
SCALE: 1" = 1'-0"

NOTE:
SIMPSON MASA MAY BE USED IN LIEU OF ½"ø ANCHOR BOLTS

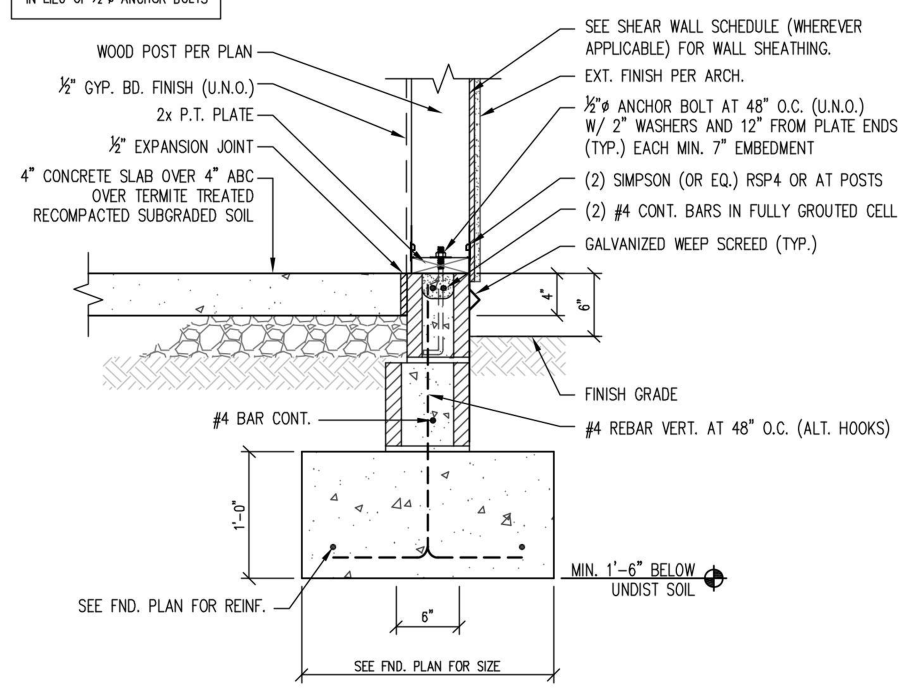

2 EXTERIOR WALL AT POST
SCALE: 1"=1'-0"

NOTE:
1. SIMPSON MASA MAY BE USED IN LIEU OF ½"ø ANCHOR BOLTS
2. SEE 10/SD3 FOR RETAINING IN ALL STEM HEIGHTS GREATER THAN 1'-6" ABOVE FINISHED GRADE

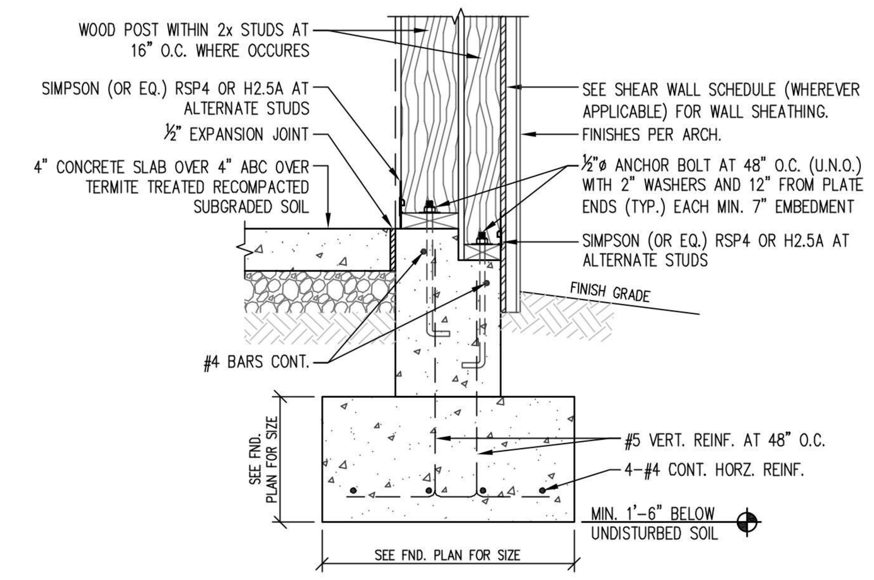

3 EXTERIOR DOUBLE WALL AND FOOTING AT POST
SCALE: 1" = 1'-0"

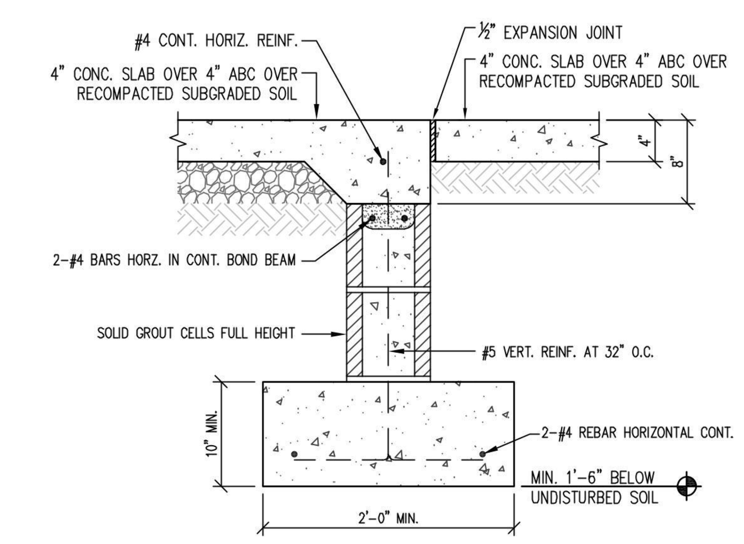

4 SLAB AT GARAGE ONLY
SCALE: 1" = 1'-0"

NOTE:
1. RAISE STEM WALL HEIGHT AS REQUIRED AT PLANTER AREAS. WATER PROOF ALL CMU WALLS INSIDE PLANTERS
2. SEE 10/SD3 FOR RETAINING IN ALL STEM HEIGHTS GREATER THAN 1'-6" ABOVE FINISHED GRADE

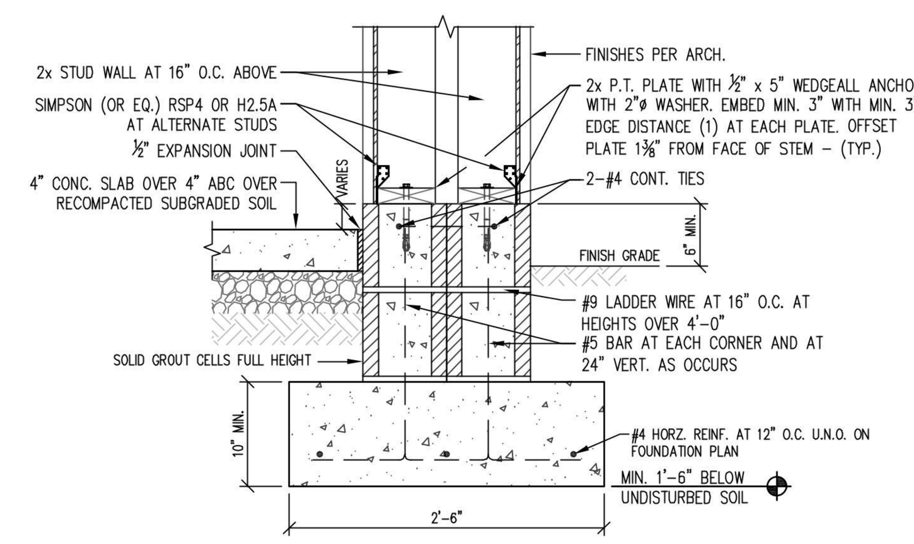

5 FRAMED COLUMN AT CMU STEM WALL
SCALE: 1" = 1'-0"

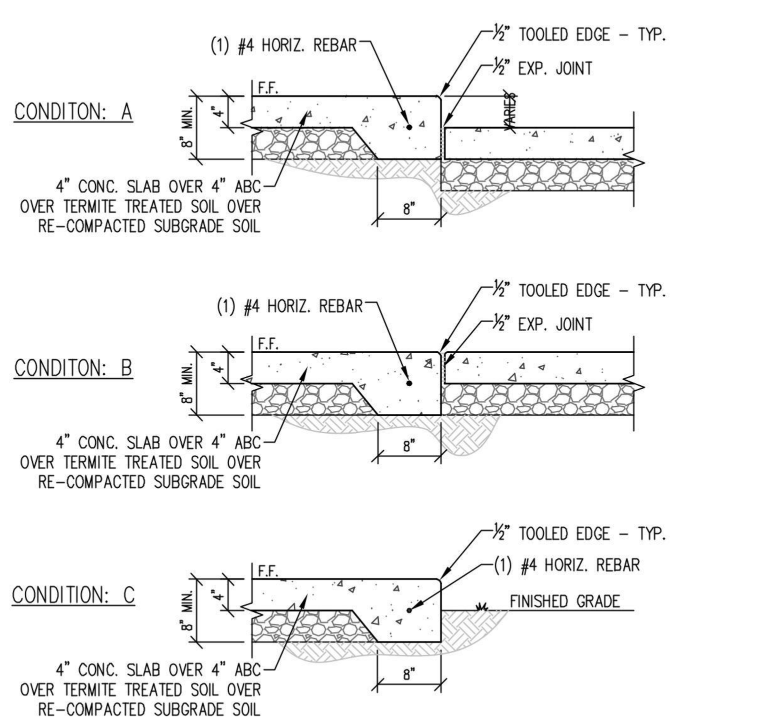

6 TURNDOWN SLAB CONDITIONS
SCALE: 3/4" = 1'-0"

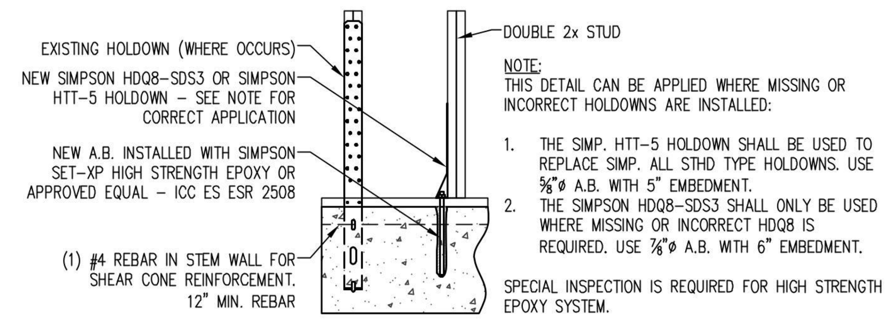

NOTE:
THIS DETAIL CAN BE APPLIED WHERE MISSING OR INCORRECT HOLDOWNS ARE INSTALLED:

1. THE SIMP. HTT-5 HOLDOWN SHALL BE USED TO REPLACE SIMP. ALL STHD TYPE HOLDOWNS. USE ⅝"ø A.B. WITH 5" EMBEDMENT.
2. THE SIMPSON HDQ8-SDS3 SHALL ONLY BE USED WHERE MISSING OR INCORRECT HDQ8 IS REQUIRED. USE ⅞"ø A.B. WITH 6" EMBEDMENT.

SPECIAL INSPECTION IS REQUIRED FOR HIGH STRENGTH EPOXY SYSTEM.

7 HOLDOWN RETROFIT DETAIL
SCALE: 1" = 1'-0"

NOTE:
1. MIN 3" CLEAR COVER FOR ALL REBAR.
2. BOTTOM OF FOOTING SHALL BE MIN. 30" INTO UNDISTURBED SOIL.

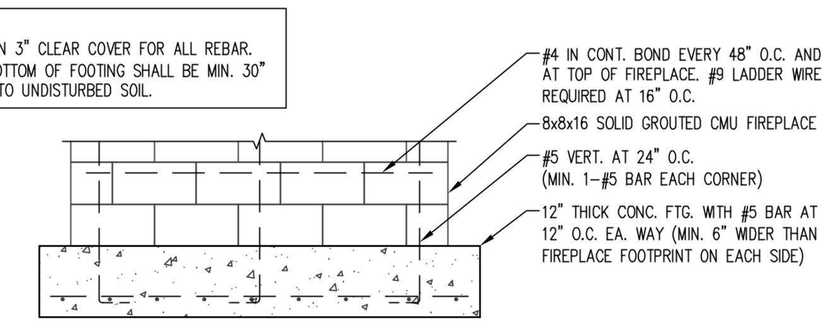

7A MONOLITH MASONRY FOOTING
SCALE: 1/2" = 1'-0"

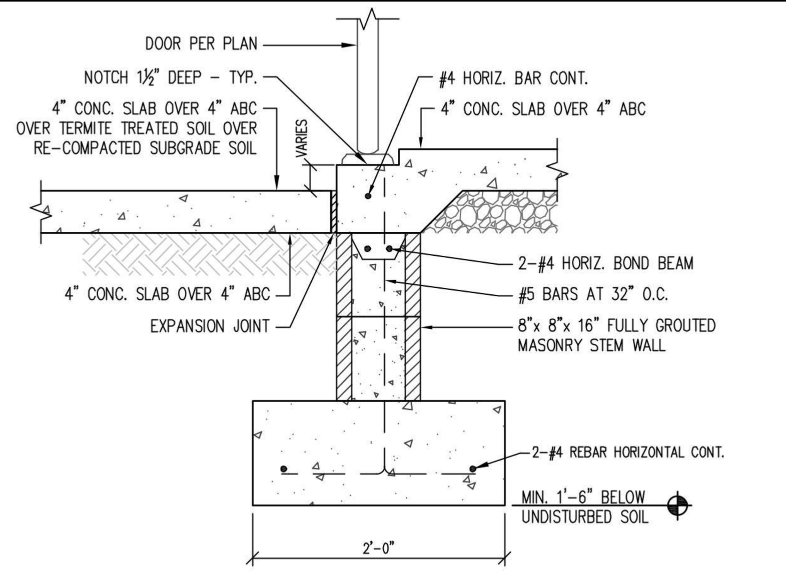

8 TURNDOWN AT EXTERIOR DOOR
SCALE: 1" = 1'-0"

NOTE:
REBAR SHALL BE A MIN. 3" ABOVE BOTTOM OF FOOTING WHERE APPLICABLE

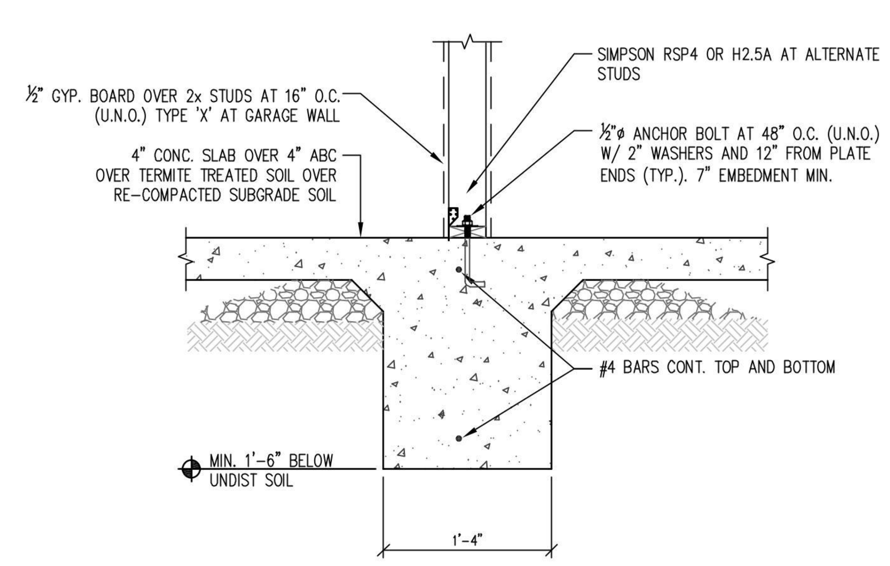

9 INTERIOR BEARING WALL FOOTING
SCALE: 1" = 1'-0"

NOTE:
1. SIMPSON MASA MAY BE USED IN LIEU OF ½"ø ANCHOR BOLTS
2. SEE 10/SD3 FOR RETAINING IN ALL STEM HEIGHTS GREATER THAN 1'-6" ABOVE FINISHED GRADE

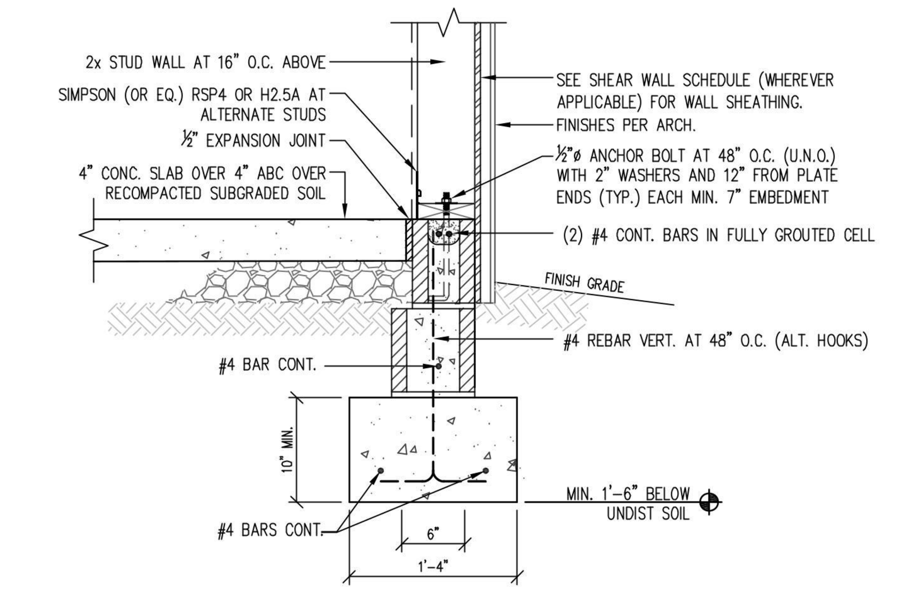

10 EXT. STEM AND FOOTING AT GARAGE
SCALE: 1" = 1'-0"

NOTE:
IN REINFORCED SLABS, HALF THE REINFORCING IS ELIMINATED ACROSS THE CONTROL JOINT

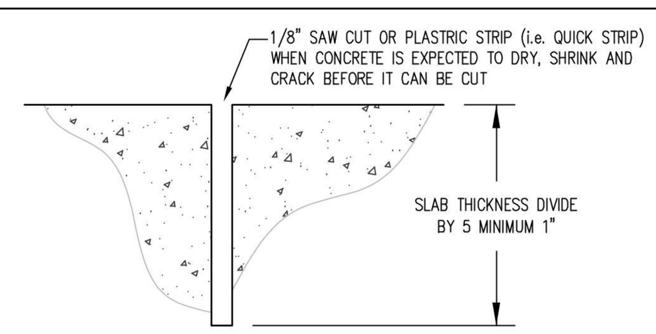

11 CONTROL JOINT DETAIL
SCALE: 1" = 1'-0"

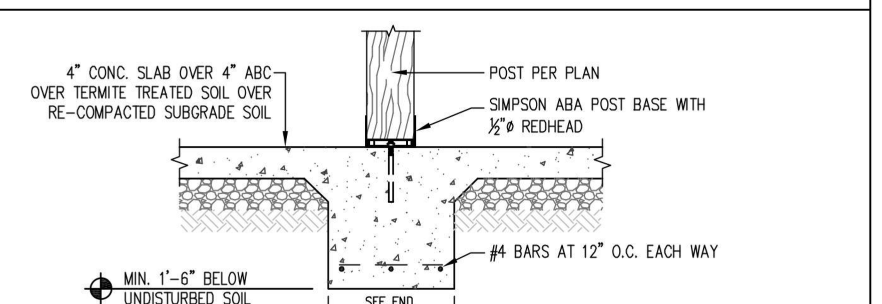

12 INTERIOR POINT LOAD FOOTING
SCALE: 1" = 1'-0"

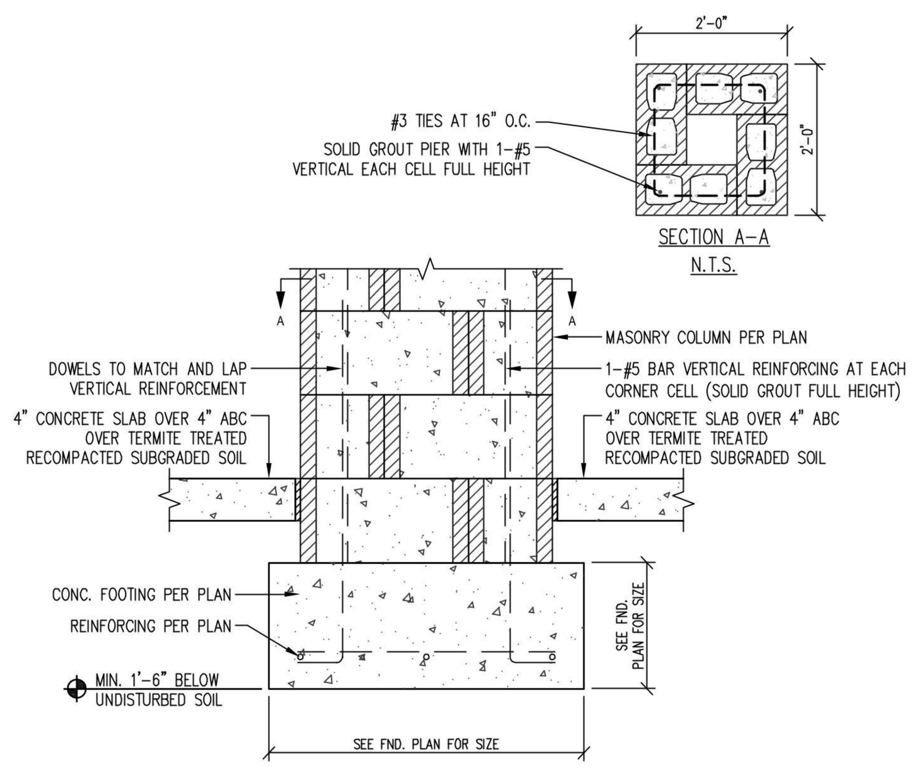

13 MASONRY COLUMN AND FOOTING
SCALE: 1" = 1'-0"

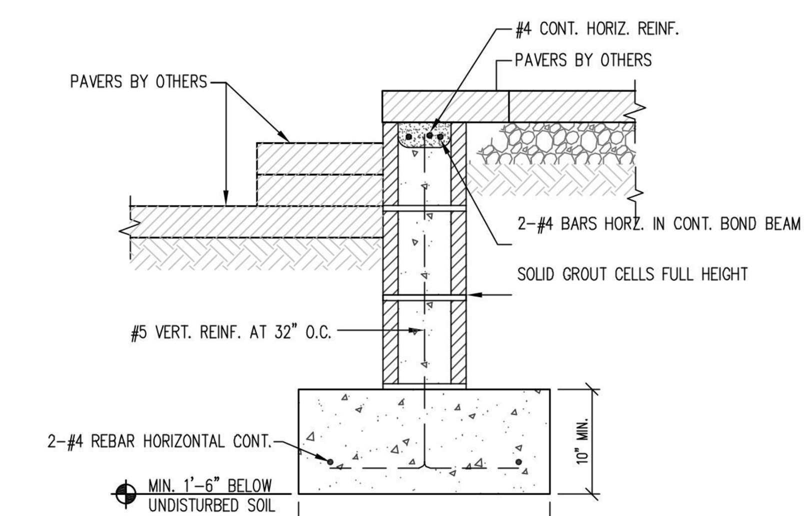

14 PAVER STEPS
SCALE: 1" = 1'-0"

NOTE:
REFER TO ARCH. FOR RISE AND RUN OF STEPS.

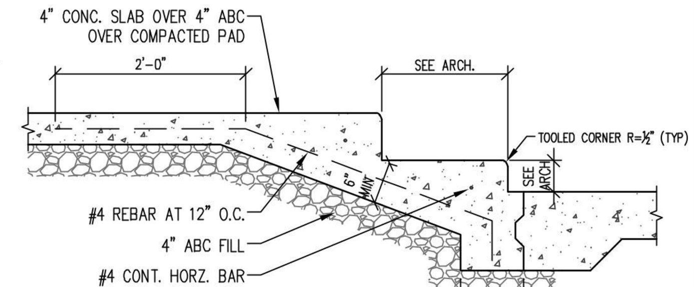

14A CONCRETE STAIRS
SCALE: 3/4" = 1'-0"

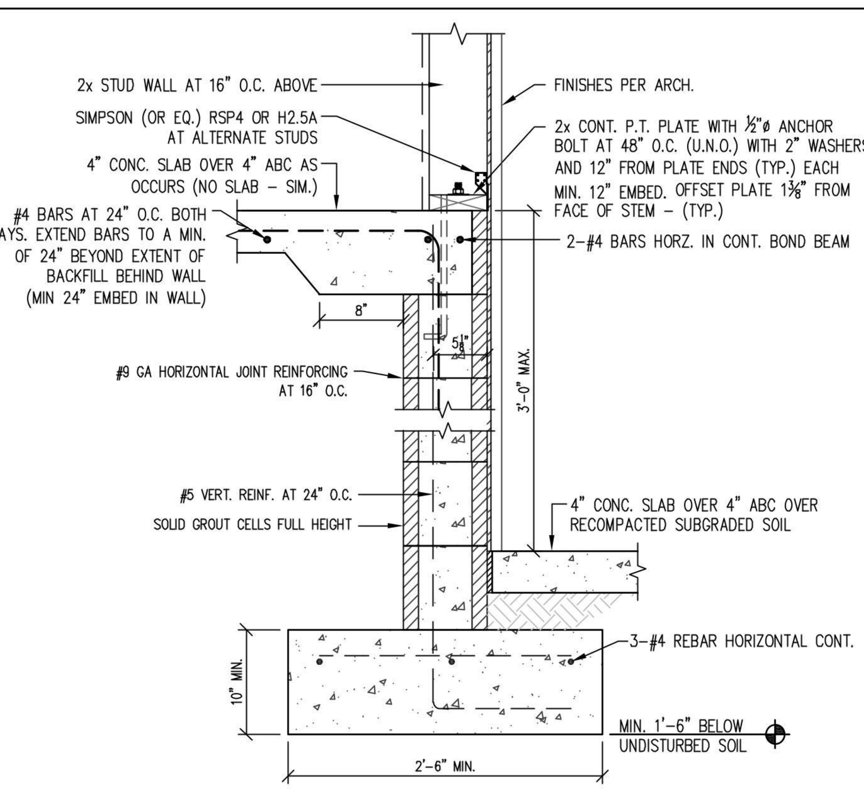

15 STEM AND FOOTING AT STEP DOWN SLAB
SCALE: 1" = 1'-0"

NOTE:
1. RAISE STEM WALL HEIGHT AS REQUIRED AT PLANTER AREAS. WATER PROOF ALL CMU WALLS INSIDE PLANTERS
2. SEE 10/SD3 FOR RETAINING IN ALL STEM HEIGHTS GREATER THAN 1'-6" ABOVE FINISHED GRADE

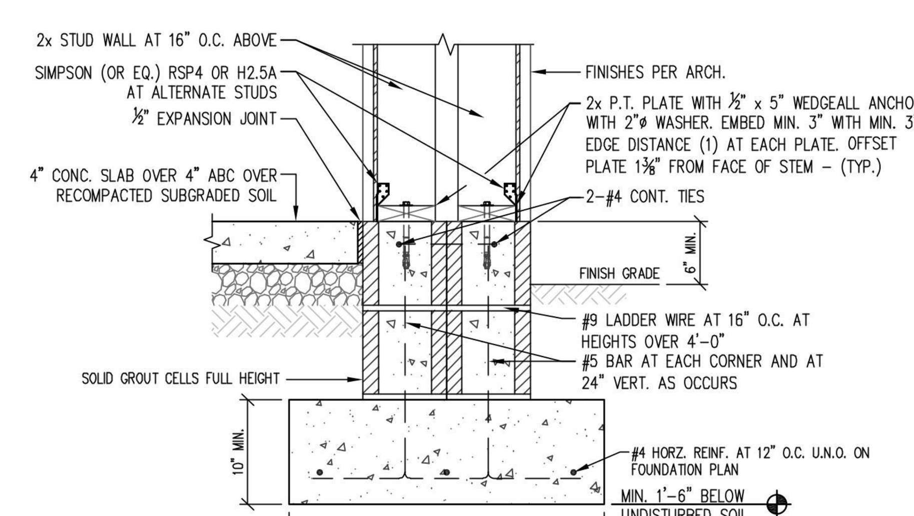

16 EXT. DOUBLE WALL AND FOOTING
SCALE: 1" = 1'-0"

NOTE:
REBAR SHALL BE A MIN. 3" ABOVE BOTTOM OF FOOTING WHERE APPLICABLE

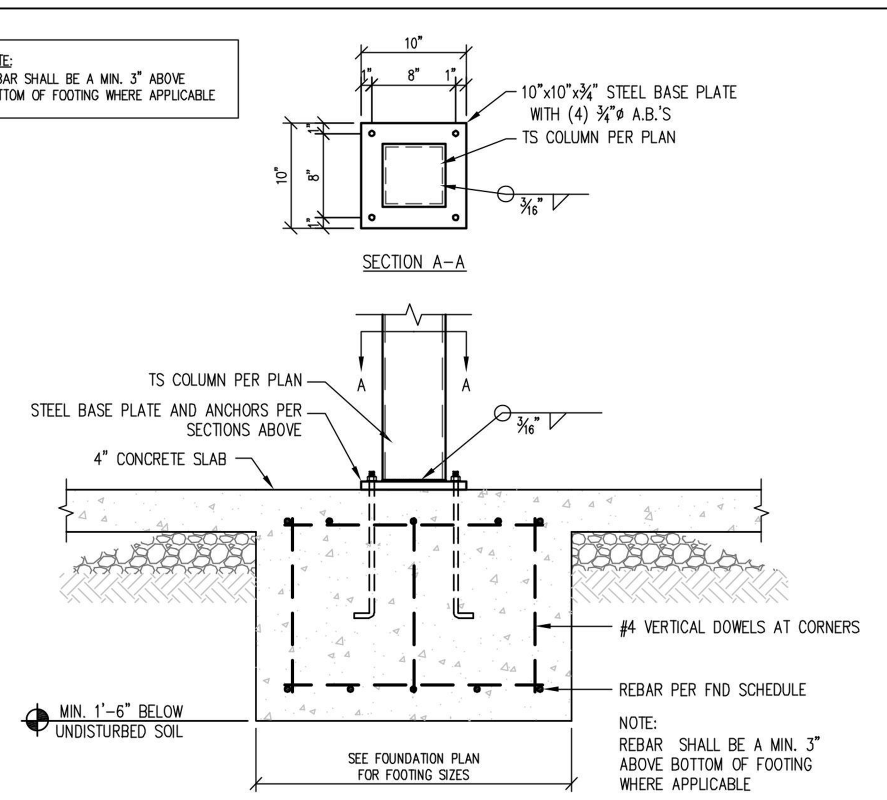

17 ISOLATED FOOTING AT STEEL COLUMN
SCALE: 1"=1'-0"

NOTE:
SEE 10/SD3 FOR RETAINING IN ALL STEM HEIGHTS GREATER THAN 1'-6" ABOVE FINISHED GRADE

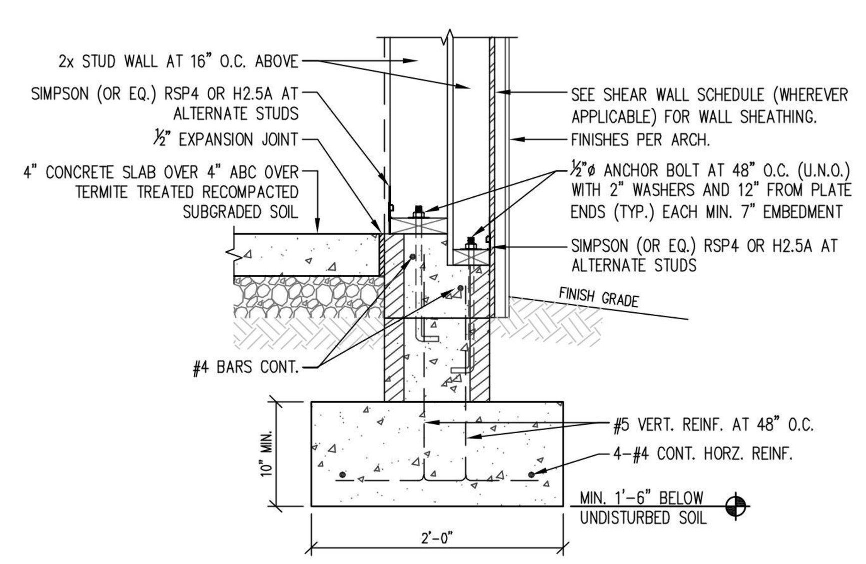

18 EXTERIOR DOUBLE WALL AND FOOTING
SCALE: 1" = 1'-0"

NOTE:
SEE 10/SD3 FOR RETAINING IN ALL STEM HEIGHTS GREATER THAN 1'-6" ABOVE FINISHED GRADE

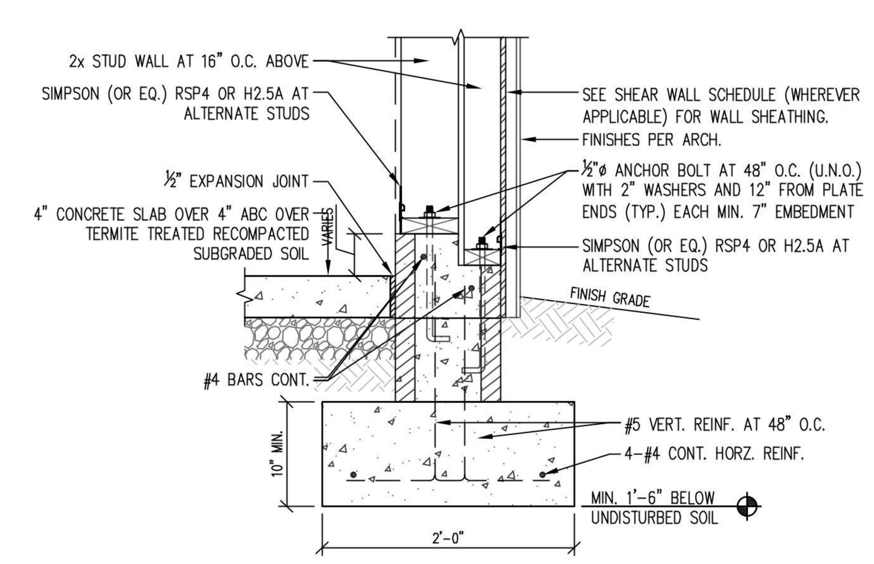

19 GARAGE EXTERIOR DOUBLE WALL AND FOOTING
SCALE: 1" = 1'-0"

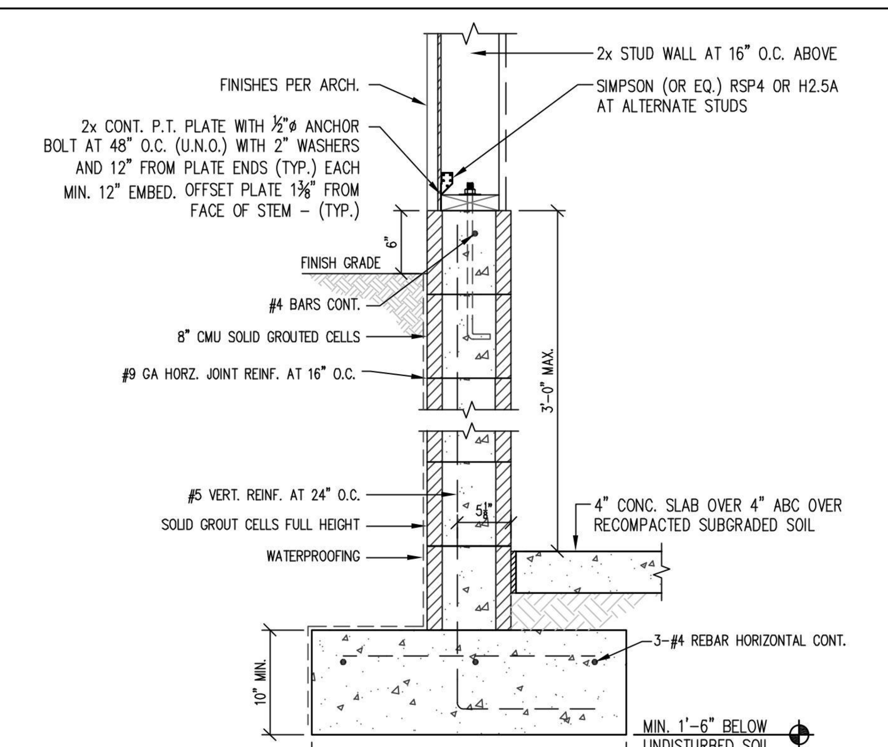

20 STEM AND FOOTING AT STEP DOWN SLAB
SCALE: 1" = 1'-0"

NOTE:
SPECIAL INSPECTION REQUIRED FOR ALL EPOXY PROCEDURES

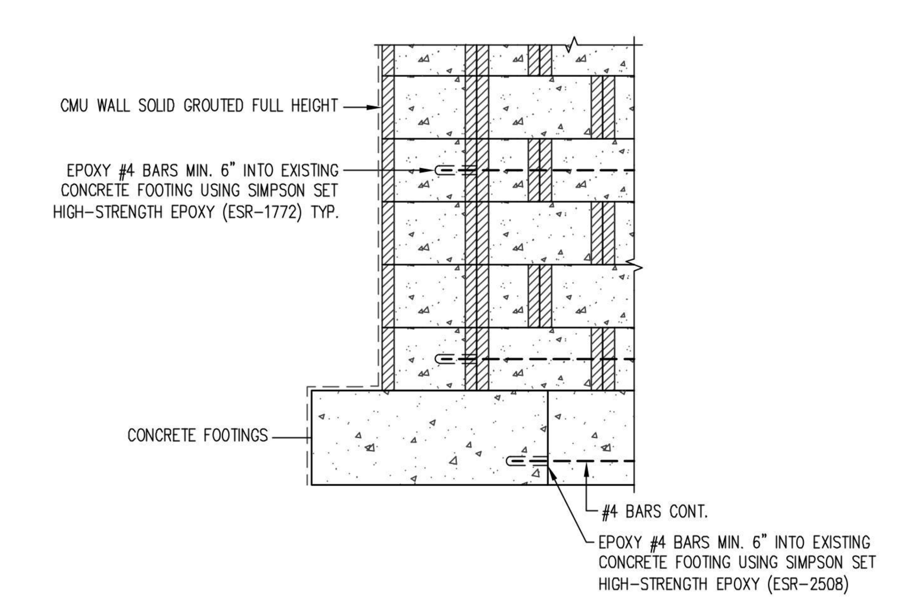

21 STEM / STEM AND FOOTING CONNECTION
SCALE: 1" = 1'-0"

KASNOFF RESIDENCE

15546 EAST TELEGRAPH DRIVE
FOUNTAIN HILLS, ARIZONA 85268

Gilbert Structural LLC
2036 North Gilbert Road
Suite 2-428
Mesa, Arizona 85203
Office 480-398-8144
Fax 480-398-8166

PROFESSIONAL SEAL

Registered Professional Engineer (Civil) CERTIFICATE NO. 41931 WILLIAM L. GILBERT Date Signed.. 2-4-2022 Arizona, U.S.A.

REVISIONS
1 .
2 .
3 .
4 .
5 .

PROJECT NUMBER: -
DATE: 2.4.2022

APPROVED
07/11/2022
TOWN OF FOUNTAIN HILLS INC. 1989 All that is Arizona

SHEET TITLE:
STRUCTURAL DETAILS

SHEET NUMBER:
SD1

THIS DRAWING IS AN INSTRUMENT OF SERVICE AND THE PROPERTY OF GILBERT STRUCTURAL LLC AND SHALL REMAIN THEIR PROPERTY. THE USE OF THIS DRAWING SHALL BE RESTRICTED TO THE ORIGINAL SITE FOR WHICH IT WAS PREPARED AND PUBLICATION THEREOF IS EXPRESSLY LIMITED TO SUCH USE. REUSE, REPRODUCTION OR PUBLICATION BY ANY METHOD IN WHOLE OR PART IS PROHIBITED WITHOUT THEIR WRITTEN CONSENT.

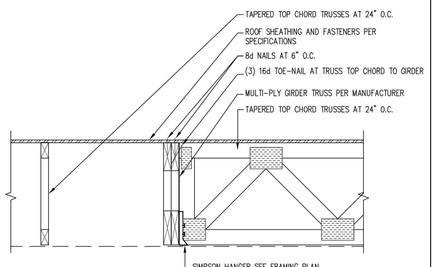

1 ROOF TRUSS / GIRDER CONNECTION

SCALE: 1" = 1'-0"

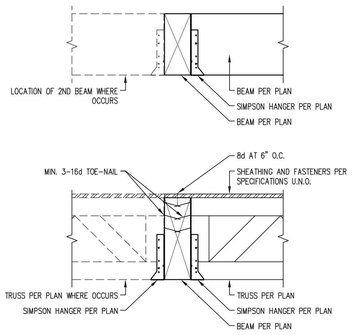

2A BEAM / TRUSS / RAFTER TO BEAM

SCALE: 1"=1'-0"

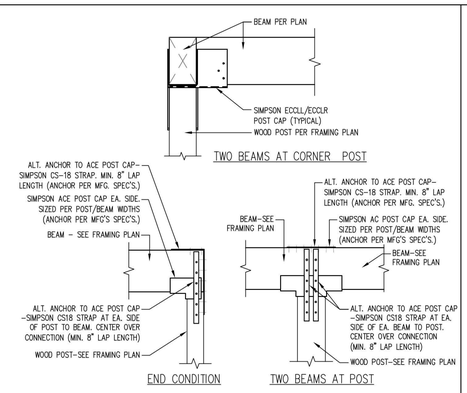

2 TYPICAL BEAM / POST CONNECTION

NOT TO SCALE

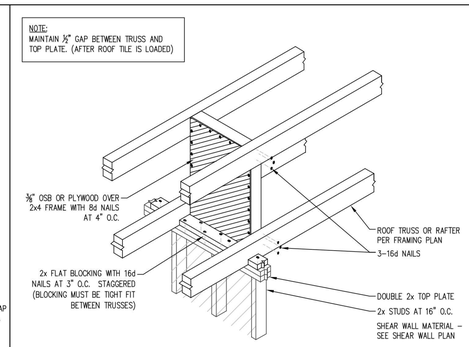

3 SHEAR TRANSFER AT NONBEARING WALL

NOT TO SCALE

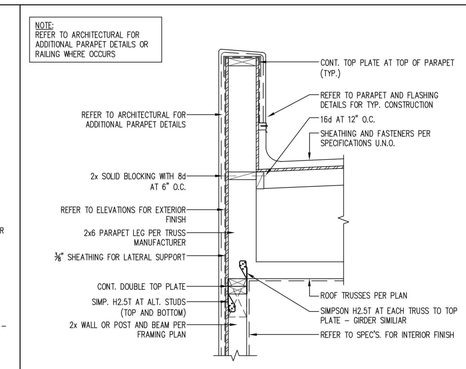

4 PERP. TRUSSES AT PARAPET WALL

SCALE: 1" = 1'-0"

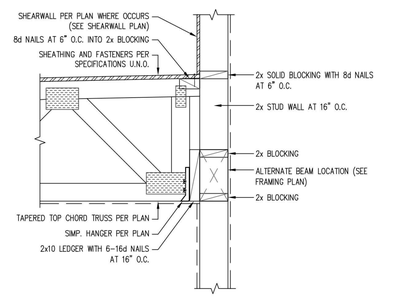

5 ROOF/FLOOR TRUSS TO LEDGER AT WALL

SCALE: 1"=1'-0"

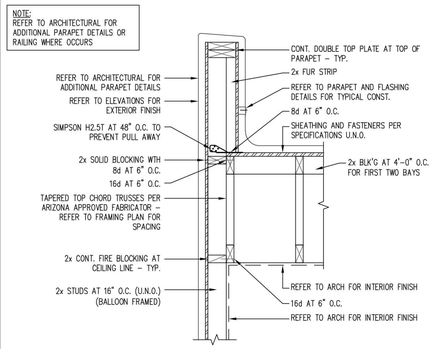

PARALLEL TRUSSES
AT PARAPET WALL / RAILING

6

SCALE: 1" = 1'-0"

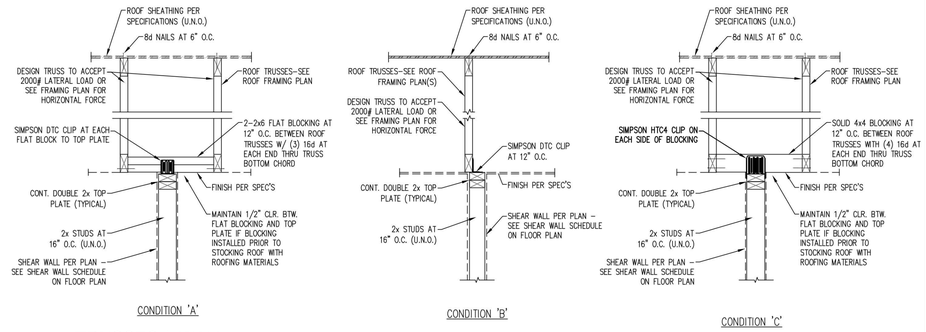

TRUSSES / WALL
TYP. SHEAR TRANSFER CONDITIONS

7

NOT TO SCALE

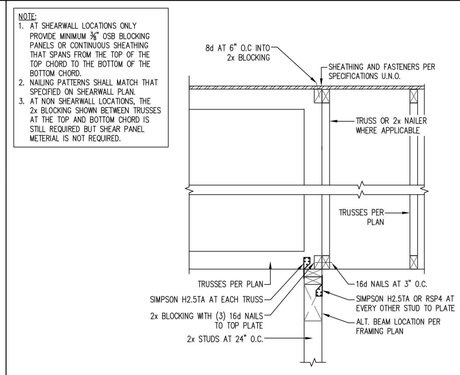

8 PERP. / PAR. ROOF TRUSSES AT WALL

SCALE: 3/4"=1'-0"

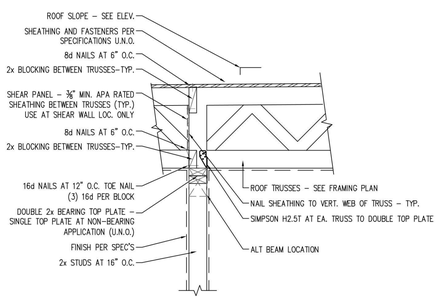

9 INTERMEDIATE BEARING WALL / BEAM

SCALE: 1" = 1'-0"

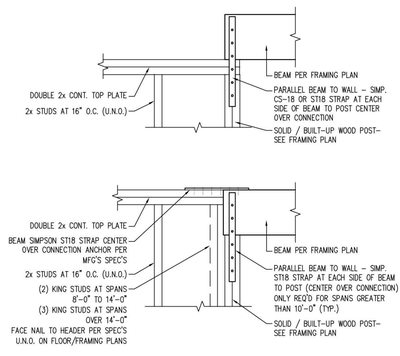

10 BEAM AT WALL CONNECTIONS

NOT TO SCALE

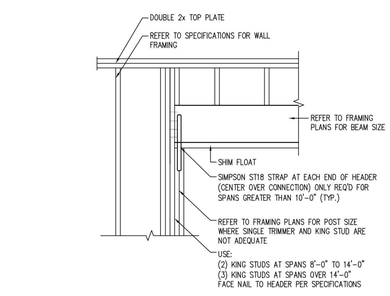

11 HEADER CONNECTION AT WALLS

SCALE: 1" = 1'-0"

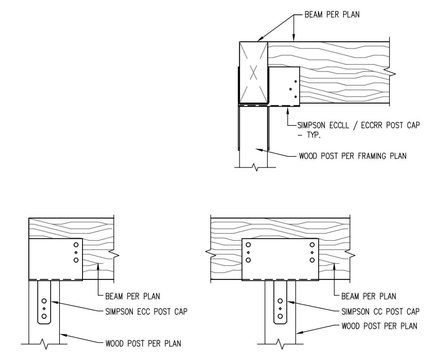

12 TYPICAL BEAM / POST CONNECTION

NOT TO SCALE

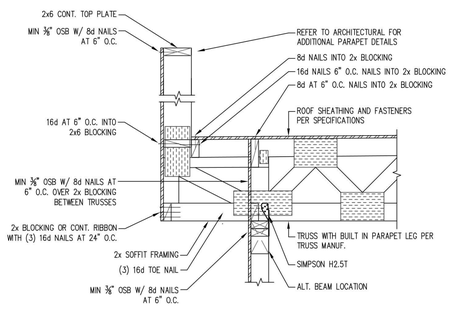

CANTILEVERED BOTTOM
CHORD BEARING TRUSS AT BEAM / WALL

13

SCALE: 1" = 1'-0"

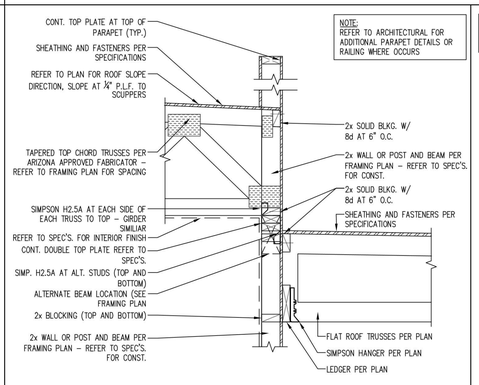

PERP. HIGH TRUSS / LOW TRUSS

14

SCALE: 1" = 1'-0"

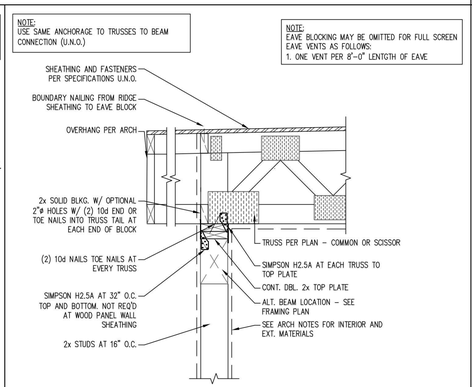

TYP. TRUSS / WALL (BEAM SIMILAR)

15

SCALE: 1" = 1'-0"

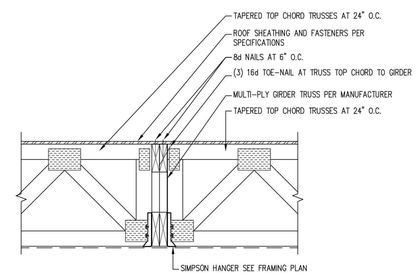

16 ROOF TRUSSES AT GIRDER CONNECTION

SCALE: 1" = 1'-0"

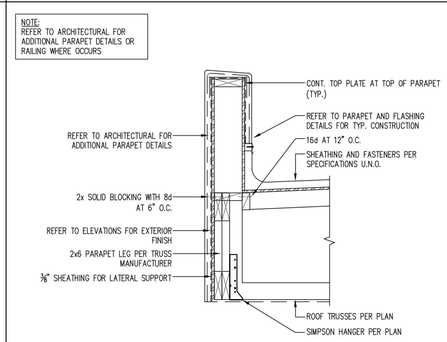

17 PERP. TRUSSES AT GIRDER TRUSS

SCALE: 1" = 1'-0"

KASNOFF RESIDENCE

15546 EAST TELEGRAPH DRIVE
FOUNTAIN HILLS, ARIZONA 85268

Gilbert Structural LLC
2036 North Gilbert Road
Suite 2-428
Mesa, Arizona 85203
Office 480-398-8144
Fax 480-398-8166

PROFESSIONAL SEAL

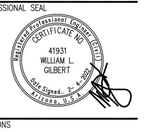

REVISIONS

1 .
2 .
3 .
4 .
5 .

PROJECT NUMBER:

DATE: 2.4.2022

APPROVED
07/11/2022

SHEET TITLE:

STRUCTURAL DETAILS

SHEET NUMBER:

SD2

THIS DRAWING IS THE PROPERTY OF THE ARCHITECT AND MAY NOT BE REPRODUCED OR USED FOR OTHER PROJECTS WITHOUT HIS WRITTEN CONSENT.

1 NOT USED

SCALE: 1" = 1'-0"

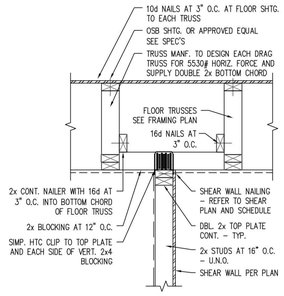

CONDITION "A"

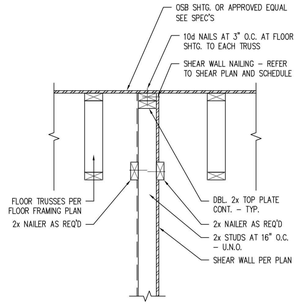

CONDITION "B"

2 FLOOR TRUSSES AT INT. SHEAR WALL

SCALE: 3/4" = 1'-0"

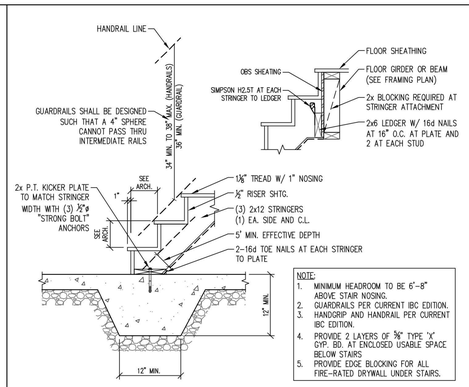

NOTE:
1. MINIMUM HEADROOM TO BE 6'–8" ABOVE STAIR NOSING.
2. GUARDRAILS PER CURRENT IBC EDITION.
3. HANDGRIP AND HANDRAIL PER CURRENT IBC EDITION.
4. PROVIDE 2 LAYERS OF ⅝" TYPE 'X' GYP. BD. AT ENCLOSED USABLE SPACE BELOW STAIRS
5. PROVIDE EDGE BLOCKING FOR ALL FIRE–RATED DRYWALL UNDER STAIRS.

3 TOP AND BOTTOM STAIR CONNECTION

NOT TO SCALE

NOTE:
1. SEE DETAIL 3/SD3 FOR HANDRAIL AND STRINGER CONNECTION INFORMATION
2. MINIMUM HEADROOM TO BE 6'–8" ABOVE STAIR NOSING.
3. GUARDRAILS PER CURRENT IBC EDITION.
4. HANDGRIP AND HANDRAIL PER CURRENT IBC EDITION.
5. PROVIDE 2 LAYERS OF ⅝" TYPE 'X' GYP. BD. AT ENCLOSED USABLE SPACE BELOW STAIRS
6. PROVIDE EDGE BLOCKING FOR ALL FIRE–RATED DRYWALL UNDER STAIRS.

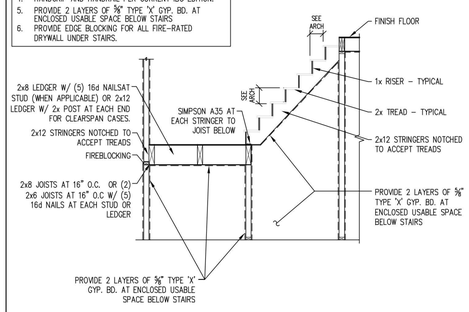

4 TYPICAL STAIR SECTION

NOT TO SCALE

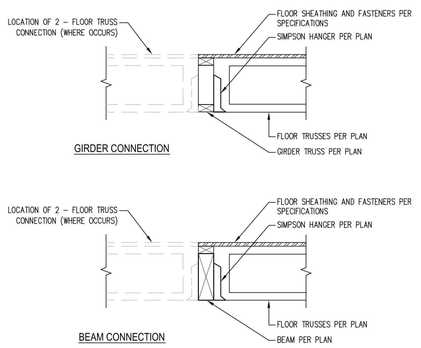

5 FLOOR TRUSSES AT BEAM OR GIRDER

NOT TO SCALE

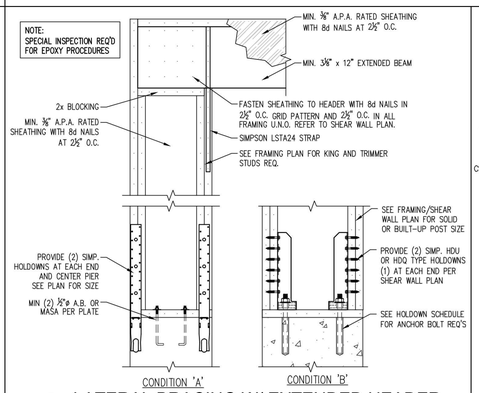

6 LATERAL BRACING W/ EXTENDED HEADER

SCALE: 1" = 1'-0"

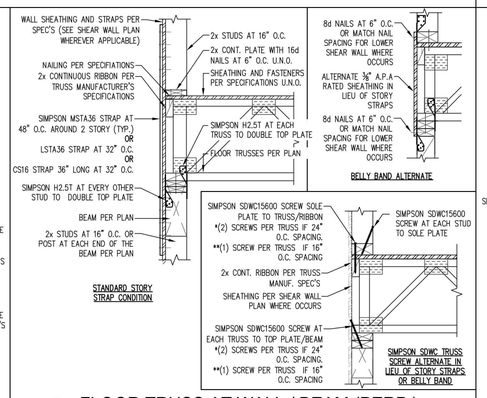

7 FLOOR TRUSS AT WALL / BEAM (PERP.)

SCALE: 1"=1'-0"

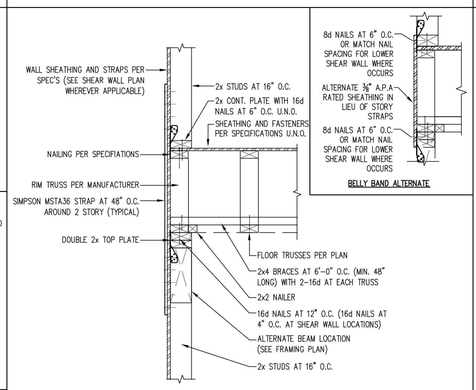

8 FLOOR TRUSS AT BEAM/ WALL (PARALLEL)

SCALE: 1" = 1'-0"

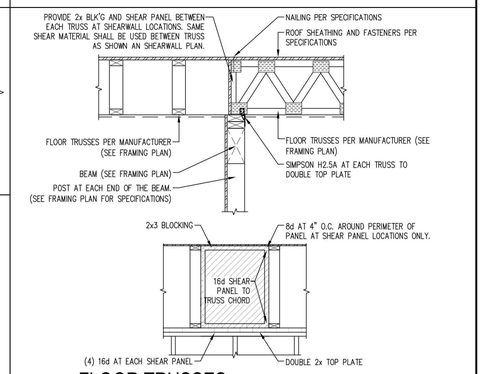

9 FLOOR TRUSSES AT BEAM / WALL (PAR. / PERP.)

NOT TO SCALE

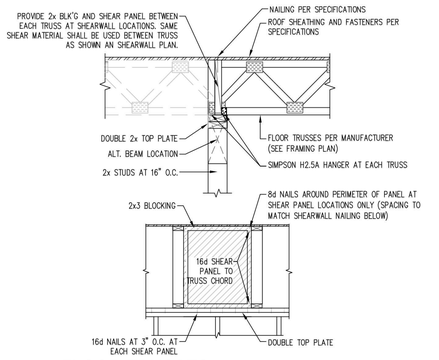

10 FLOOR TRUSSES AT INTERIOR BEARING WALL / BEAM

NOT TO SCALE

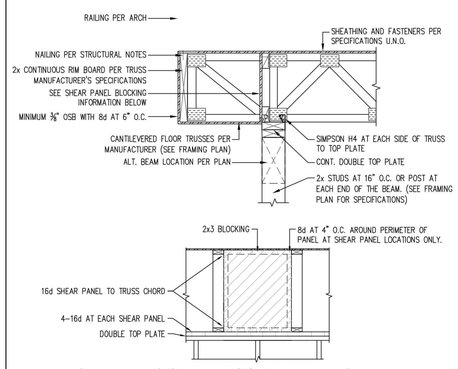

11 CANT. FLOOR TRUSS AT BEAM / WALL

NOT TO SCALE

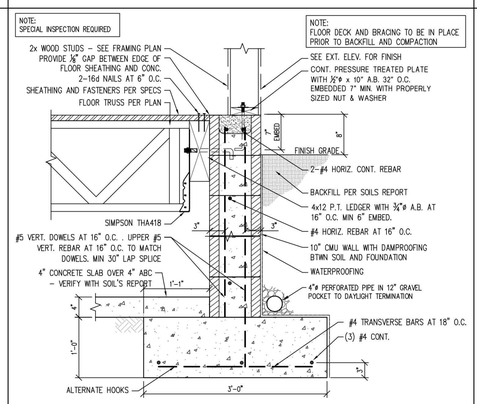

12 CMU BASEMENT WALL (TRUSSES PERP.)

NOT TO SCALE

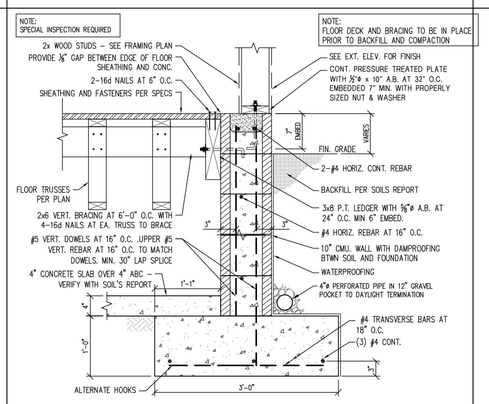

13 CMU BASEMENT WALL (TRUSSES PAR.)

NOT TO SCALE

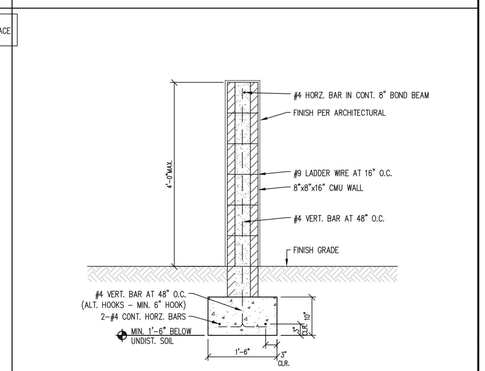

14 CMU DECORATIVE WALL

SCALE: 3/4" = 1'-0"

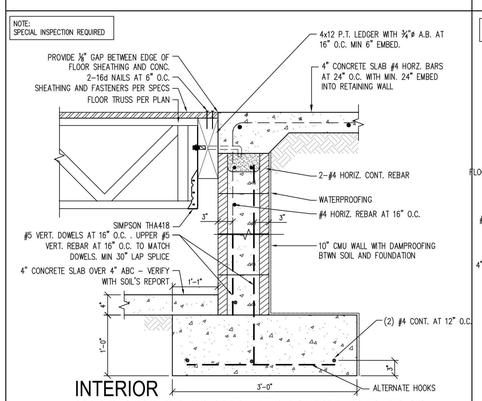

15 INTERIOR CMU BASEMENT WALL (TRUSSES PERP.)

NOT TO SCALE

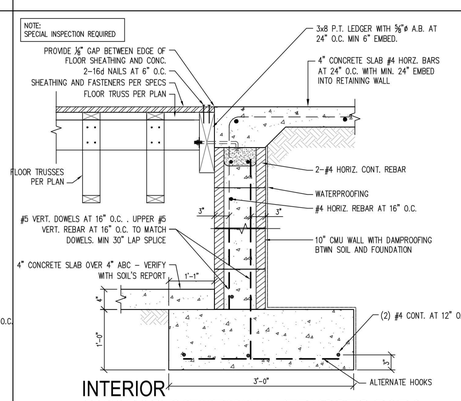

16 INTERIOR CMU BASEMENT WALL (TRUSSES PAR.)

NOT TO SCALE

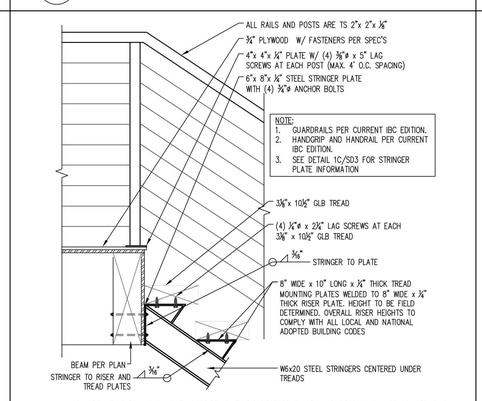

17 TOP OF STRINGER CONNECTION AT BEAM

NOT TO SCALE

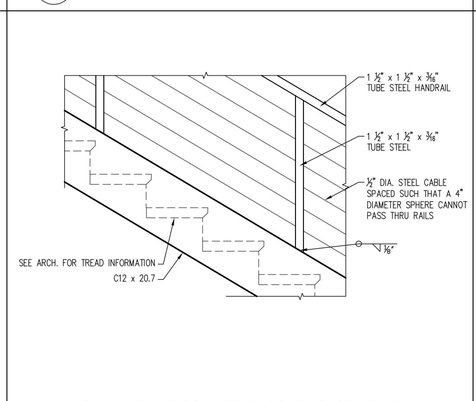

18 STEEL STAIR STRINGER AND RAILING

NOT TO SCALE

NOTE:
SLOPE CONCRETE AWAY FROM STRINGER TO FOOTING CONNECTION TO PREVENT CORROSION. CONTRACTOR TO COAT BASE OF STRINGER WITH ASTM APPROVED MATERIAL IN ACCORDANCE WITH ALL APPLICABLE BUILDING CODES

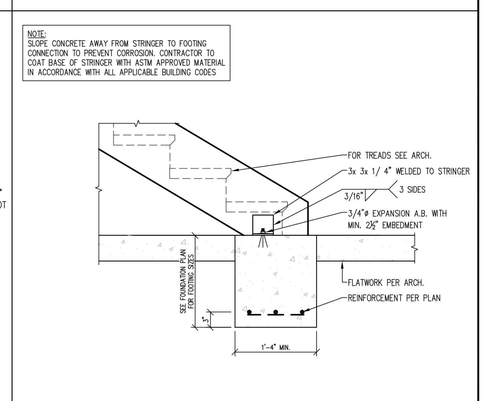

19 CONCRETE FTG. AT STEEL STAIRS

NOT TO SCALE

KASNOFF RESIDENCE

15546 EAST TELEGRAPH DRIVE
FOUNTAIN HILLS, ARIZONA 85268

Gilbert Structural LLC
2036 North Gilbert Road
Suite 2-428
Mesa, Arizona 85203
Office 480-398-8144
Fax 480-398-8166

PROFESSIONAL SEAL

Registered Professional Engineer (Civil) CERTIFICATE NO. 41931 WILLIAM L. GILBERT Date Signed 2-4-2022 Arizona, U.S.A.

REVISIONS

1 .
2 .
3 .
4 .
5 .

PROJECT NUMBER:

DATE: 2.4.2022

APPROVED
07/11/2022
City of Fountain Hills
Community Dev. Dept.
Plan Review Division

SHEET TITLE:

STRUCTURAL DETAILS

SHEET NUMBER:

SD3

THE DRAWINGS AND SPECIFICATIONS AS INSTRUMENTS OF SERVICE, ARE AND SHALL REMAIN THE PROPERTY OF THE ARCHITECT WHO PREPARED THEM, AND ARE TO BE RETURNED TO THE ARCHITECT UPON REQUEST. THEY ARE NOT TO BE USED, REPRODUCED OR PUBLISHED IN ANY WAY EXCEPT BY AGREEMENT WITH THE ARCHITECT.

PLANT MATERIALS LEGEND

LS

SYMBOL	NAME	SIZE	QTY.
	Parkinsonia 'Sonoran Emerald' Sonoran Emerald Palo Verde	36" Box	2
	Foqueria splendins Ocotillo	36" Box	5
	Agave americana Century Plant	15 gal	3
	Agave desmettiana Smooth Agave	15 gal	6
	Aloe barbadensis Medicinal Aloe	5 gal	13
	Aloe "Blue Elf" Blue Elf Aloe	5 gal	32
	Echinocereus grusonii Golden Barrel Cactus	12" DIA	9
	Ferocactus cylindraceus Compass Barrel Cactus	12 - 18" H	6
	Pachycereus schottii forma montrosus Totem Pole Cactus	15 gal	8
	Euphorbia resinifera Moroccan Mound	15 gal	5
	Ericameria laricifolia Turpentine Bush	5 gal	10

NO EMITTERS

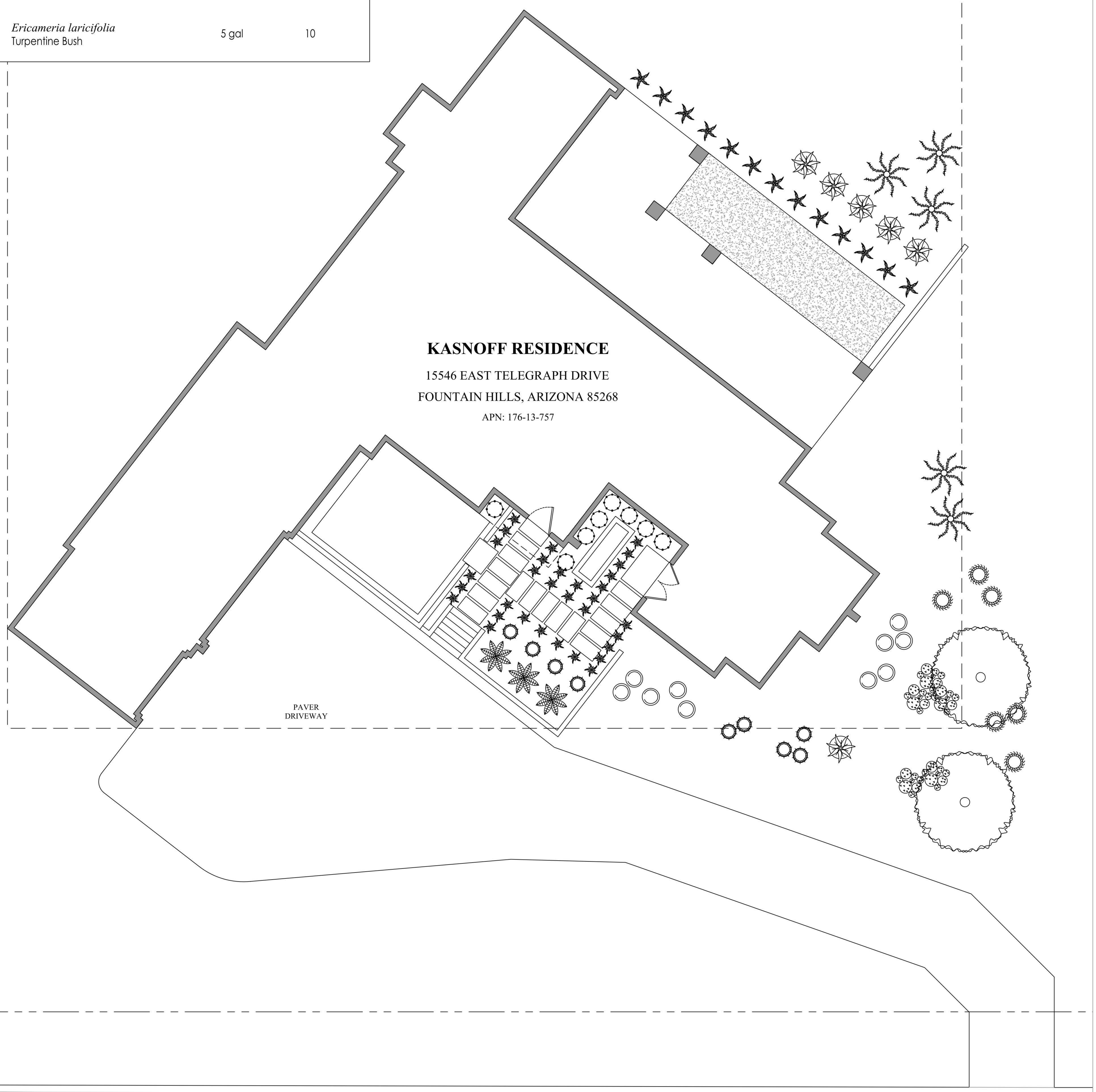

1' 2' 4' 8' 16'
SCALE: 1/8" = 1'

KASNOFF RESIDENCE
15546 EAST TELEGRAPH DRIVE
FOUNTAIN HILLS, ARIZONA 85268
APN: 176-13-757

REVISIONS

12.24.2021 MF

DATE: 12.10.2021
DESIGN: MF
DRAFT: MF

APPROVED 07/11/2022

TOWN OF FOUNTAIN HILLS

... PURPOSE, WITHOUT WRITTEN PERMISSION OF KICK-IT-UP-A-NOTCH LANDSCAPE DESIGN.

PL-1